ENCOURAGING UNIFORMITY AND CONSISTENCY IN DRAUGHT BEER SYSTEMS, SYSTEM MAINTENANCE AND BEER DISPENSE BY DEVELOPING DRAUGHT BEER QUALITY TECHNICAL STANDARDS
FY 2008

Draught beer accounts for 10% of total U.S. beer sales with a retail value in 2007 of $10 billion. For U.S. craft breweries draught beer is an even larger share of their business, accounting for 27% of sales in 2007. Draught sales are increasing as consumers gain appreciation for the superior taste and the environmental benefits of beer packaged in kegs as opposed to disposable bottles and cans. Unfortunately, there are no uniform standards for brewers, wholesalers, retailers and draught beer service companies pertaining to draught line installation, equipment, line cleaning procedures and materials, gas dispense, system temperatures, system balance, pouring and glassware cleaning procedures. When draught systems are improperly constructed and maintained, the result can be damaged or ruined beer and dissatisfied customers. In this project, the Brewers Association researched the optimal construct and maintenance of draught beer systems, compiled that research into a technical standards manual, and educated the beer trade about the standards.

Final Report
Draught Beer Quality Manual

Contacts:
Timothy J. Larsen
Senior International Marketing Spec.
Colorado Department of Agriculture, Markets Division
303-239-4118
tim.larsen@ag.state.co.us

Bob Pease
Vice President, Brewers Association
303.447.0816 x101
bob@brewersassociation.org

To: Tim Larsen, Senior International Marketing Spec.
Colorado Department of Agriculture, Markets Division

Janise Zygmont, Staff Officer Federal State Marketing Improvement Program

From: Bob Pease, Vice President Brewers Association

Re: Brewers Association Draught Quality Manual Final Report

Date: August 26th, 2009

- An outline of the issue or problem that motivated our application.

Background

Craft brewer sales have grown for 39 of the last 40 years. In 2008, craft beer sales increased by approximately 6%, followed by 12 growth in 2007 following 12% growth in 2006, 9% growth in 2005 and 8% growth in 2004. The segment now accounts for over 5% of total U.S. beer sales (by value).

Craft beers are gaining popularity in the United States and in international markets because consumers appreciate the diversity and quality of these artisan products. Using the finest ingredients available, U.S. craft brewers make beer in a wide array of styles all exhibiting unique flavor and aroma profiles. As consumers better understand the choices now available to them for beer, increasingly they trade up to the higher-value craft segment.

Draught beer is a critical component of sales for any brewery. Nationally, draught beer accounts for 10% of total sales. But for craft breweries the importance of draught beer is much higher, accounting for approximately 27% of sales. There has also been a discernable increase in draught beer sales nationwide as consumers have come to appreciate the superior taste of draught beer and the environmental benefits of draught as opposed to beer served in disposable packaging such as glass bottles and cans. Growth in draught beer sales and consumption is expected to continue as large breweries begin to team with appliance makers to expand the availability of at-home draught systems.

Unfortunately, draught beer is highly susceptible to damage and ruination. The process for delivering a fresh, properly poured, and appropriately carbonated draught beer for consumers involves an array of equipment, cleaning materials, gasses and glassware each of which requires technical understanding.

736 PEARL STREET BOULDER COLORADO 80302 USA T: +1.303.447.0816 F: +1.303.447.2825 WWW.BEERTOWN.ORG

This is not to mention the technical requirements for proper beer storage and transport, or regulations governing the cleaning and maintenance of draught lines.

The cleaning and maintenance of draught lines is one of the most problematic areas of the system. Because draught lines are typically wet, with little exposure to light, heat, or air, they commonly harbor bacteria that can damage the beer as it travels through. Draught beer line cleaning is regulated by each state. It is the responsibility of the retailer in 15 states (and Washington, DC) and is the responsibility of the beer wholesaler in 35 states. It is common for restaurants and taverns to not clean lines the recommended every two weeks simply because many do not even know this is the industry standard. Examples of common problems are beer with no foam, flat beer, beer that is too foamy, beer that has improper taste due to the presence of bacteria in the lines or faucet head, and damaged beer from sanitizer residue left in lines. Another major problem is the use of air compressors rather than compressed gas (such as CO2). Air compressors hasten the process of beer becoming flat and stale because of the oxidative effects of air being forced into the beer.

When a customer has a poor experience with draught beer, they are less likely to buy a draught beer in that establishment again, or they are left with a negative impression of the brand they just sampled. This is a risk, particularly to the growing community of craft brewers that rely on draught beer for a large portion of their business.

Many of the substandard practices now in place in the beer industry can be corrected through education. But before education can take place, a set of industry standards needs to be developed. The first step in this process is to collect and compile data on the various practices and systems now in place for constructing, maintaining and delivering draught beer to consumers. An industry working group has been arranged to review this material and to reach a consensus on optimal practices for draught beer. This will form the basis for an industry technical standards manual that can then be made available to the beer trade in hard copy form and via the Internet. Summary sheets of the most pertinent information can also be developed for easier circulation and seminars on these recommended standards can be incorporated into the Craft Brewers Conference and other industry forums for education and information exchange.

The number of people and organizations that could ultimately benefit from this project is tremendous. The Brewers Association represents 1,330 active member breweries with members in all 50 states. There are also 162 beer wholesaler companies that are members of the association out of approximately 1,800 wholesalers in the U.S. Other companies that would benefit from the project include draught beer equipment providers, companies that provide draught line tracking equipment, draught service technicians, and the thousands of on-premise outlets whose practices have room for improvement. The BA estimates that this project would impact well over 4,000 companies throughout the country in a beneficial manner.

Justification

There is an unqualified need for industry standards pertaining to the distribution of draught beer in the United States. Lack of such standards has resulted in product loss and claims back to the producer for spoiled beer that was ultimately not the fault of the brewer. The Brewers Association is the perfect organization to take on the responsibility to lead this effort. The BA brings together the breweries and allied trade whose contributions would be needed for developing industry-wide standards. Unfortunately, the costs of this effort are extensive. While it has been possible for BA staff and industry

members to contribute to the research effort at minimal cost, additional research is needed and there remains the larger costs of developing, printing and distributing the manual, and ongoing educational outreach.

The BA has set aside a portion of its own 2008 and 2009 budgets for this project, but grant funds would help ramp up the development timeline. No other grant programs have been identified as a fit for this project while the FSMIP program appears a perfect fit considering its mandate to fund projects that, **"Develop and improve standards of quality, condition, quantity, grade and packaging in order to encourage uniformity and consistency in commercial practices."**

Summary

There was limited information on best practices related to draught beer handling, serving and system installation and maintenance, with the result of beer being served to the customer in retail outlets that tasted differently than intended by the brewer. The motivation for the application was to assist beer retailers, draught system technicians, wholesalers and brewers with the information that assists all parties in making sure that draught beer gets to the customer in the manner the brewer intends.

- How the issue or problem was approached via the project.

A working group of large, small and foreign brewers appointed by the Brewers Association technical committee convened a set of monthly conference calls, two in-person meetings and email communications to identify the topics needed for inclusion in the draught beer quality manual, to assign section authors, to complete peer review of the manual sections, to format and produce the manual in written and electronic "wiki" format, and to disseminate the material to brewers, beer wholesalers and their contacts.

- Contribution of public or members.

Members of the Brewers Association provided content, many of the images, peer review, staff time for all phases of the project, and presentation of the manual at various stages of development at the Craft Brewers Conference, World Brewing Congress, National Beer Wholesalers Association Convention and Great American Beer Festival. Specific members of the public were contracted for editing, photography and website population services.

- Results, conclusions, and lessons learned.

The results can be viewed at www.draughtquality.org and through review of the printed manual. One lesson learned is that brewers were in pretty close alignment on what the best practices for draught beer handling serving and system maintenance are. Another lesson learned is how out of synch many retail establishments are with properly handling their beer lines.

- Current or future benefits to be derived from the project.

As draught beer technicians, retailers, brewers and beer wholesalers learn best practices, there will be an increase in the number and percentage of retail establishments that serve beer properly to their customers. The result will be an increase in draught beer sales and draught beer market share.

- Additional information available (e.g. publications, websites).

Publication of the Draught Beer Quality Manual is complete and already in need of reprint. The manual or its sections can also be downloaded free of charge at www.draughtquality.org.

- Recommendations for future research needed, if applicable.

Work is still being done of line cleaning chemical efficacy and effectiveness of manufacturer recommendations. "One sheets" of sections that will be particularly helpful for technicians in the field are in development, on the drawing board or still to be considered. The draught beer quality working group that developed the manual continues to meet and discuss future project components. The website and manual will receive updates and reprints as more technical information becomes available.

Robert D Pease

Vice President, Brewers Association

303 447 0816

bob@brewersassociation.org

brewers association

draught beer quality manual

Prepared by the
Technical Committee of
the Brewers Association

August 2009

BREWERS ASSOCIATION®

preface

the Draught Quality Guidelines group formed in March 2007 under the direction of the Brewers Association technical committee. Our overriding mission was to improve the quality of draught beer dispensed to our customers.

Distributors, wholesalers, retailers or draught installation teams may install a draught system. But once in place, each system commonly pours a wide range of brewers' and suppliers' products. We have sought to bring the industry together to agree upon standards that present everyone's beer in an optimal condition.

When handled properly from brewery to bar, draught beer delivers what many consider to be the freshest, most flavorful beer available to the customer. But the job does not end once the keg is tapped and the beer begins to flow. Good beer quality depends on proper alignment of the dispense variables and consistent housekeeping practices.

The draught quality group focused on these and other areas to develop a clear and well researched resource of best practices for draught beer. Of course, individual brewers may have additional quality requirements or recommendations for various brands beyond these commonly agreed upon standards.

our mission

To improve the quality of draught beer for all beer drinkers.

our goal

To make our Web site information available to as many beverage industry members and consumers as possible, and work toward being the definitive draught quality resource for the U.S.A.

www.draughtquality.org

We have assembled this draught quality guidelines manual and will continue to refine it in the future. Our goal is to provide useful and current information for all industry members, manufacturers, distributors, retailers, and consumers. This manual and excerpts from it are available at www.draughtquality.org and we encourage all industry members and affiliated groups to link to the Web site. ■

acknowledgements

We would like to thank our industry colleagues who worked on the development of this manual for their input, expertise, and commitment to consistently deliver the highest possible quality of draught beer to the consumer. If we overlooked anyone who contributed we sincerely apologize.

Special thanks are extended to Ken Grossman, President of Sierra Nevada Brewing Co. As the 2008 Chair of the Brewers Association Technical Committee, Ken galvanized the creation of this manual through a collaborative effort with the brewing community, and we appreciate the time and dedication he and his colleagues put forth to bring this project to fruition.

Anheuser-Busch, Inc. Colleagues
Boulevard Brewing Company: Neil Witte
Brewers Association: Paul Gatza, Charlie Papazian, Bob Pease, Tim Sloan
Cicerone Certification Program: Ray Daniels
The Gambrinus Company: Jaime Jurado
InBev International: Cian Hickey
MillerCoors: Steve Armstrong, James Joyce, Scott Nielsen, Mike Smith
New Belgium Brewing Company: Matt Meadows
Sierra Nevada Brewing Co.: Rob Gerrity, Ken Grossman, Laura Harter, Charles Kyle
Lucky Bucket Brewing Company: Zac Triemert

We are grateful to our industry equipment suppliers who graciously allowed the use of their graphics and equipment information in this manual:

Banner Equipment Company
McDantim, Inc.
Micro Matic, Inc.
Perlick Corporation

Front cover photo by **Michael Lichter Photography**. Special thanks to **Avery Brewing Company,** Boulder, Colorado.

The Brewers Association wishes to thank the United States Department of Agriculture and the Colorado State Department of Agriculture for their support and funding of this project. State funds for this project were matched with Federal funds under the Federal-State Marketing Improvement Program of the Agricultural Marketing Service, U.S. Department of Agriculture.

Chapter heading photos ©2009 Shutterstock, LLC, Jupiter Images, and Getty Images

table of contents

Preface 1

Acknowledgements 2

Introduction 5

Section I: Draught Equipment and System Configurations 6

Chapter 1: Essential Draught System Components 8

Refrigeration/Cooling 8

Keg 9

Coupler 10

Beer Line 11

Faucet 12

Gas Source 14

Gas Line 14

Regulator 15

Tail Pieces and Connectors 16

A Word about Metal Parts 16

Chapter 2: Temporary Draught Dispense . . . 17

Picnic Pumps 17

Jockey Boxes 17

Jockey Box Set Up and Use 18

Cleaning and Maintenance 18

Chapter 3: Equipment and Configurations for Direct Draw Draught Systems 19

Drip Tray 20

Towers 20

Shanks 20

Chapter 4: Equipment and Configurations for Long-Draw Draught Systems 21

Beer 21

Components: 22

Barrier Tubing 22

Wall Brackets 22

FOB (Foam on Beer) 23

Beer Pumps 23

Quick-Connect (or Push) Fittings 23

Gas 24

Gas Blenders 24

Nitrogen Generators 25

Gas Filters 25

Nitrogen Gas (N_2) 25

Blended Gas Bottles 25

Cooling: 25

Section II: Draught Operations 27

Chapter 5: A Matter of Balance 28

Components of Balance 28

Carbonation Dynamics 29

System Balance 30

Designing For Resistance 31

Mixed Gas 31

Dispense Goals 31

Balancing Draught Systems 32

Chapter 6: Preparation to Pour 34

Cold Storage and Proper Chilling of Kegs before Serving 34

Linking Kegs in Series 35

Chapter 7: Serving Draught Beer 36

Glassware Cleaning 36

Manual or Hand Cleaning in the Three-Tub Sink 36

Automatic glass washing machines 37

Handling Clean Glasses 37
Testing for "Beer-Clean" Glass 38
Glassware Temperature 38
Pouring Draught Beer 39
Pouring Hygiene 39
Free-Flow Pouring 39
Chapter 8: System Maintenance and Cleaning 40
Cleaning Standards 40
Common Issues 41
Cleaning Safety 42
System Design and Cleanliness 42
Other Line Cleaning Methods 42
System Maintenance: Line Replacement . . 42
Detailed Recommendations 42
Cleaning Frequency and Tasks 42
Cleaning Solutions And Their Usage 43
Caustic-Based Cleaning Chemistry 43
Acid Chemical 43
Water Rinsing 43
Cleaning Methods and Procedures 44
Before You Start 44
Recirculation-Electric Pump Cleaning Step By-Step Procedure: 45
Static – Pressure Pot Step-By-Step Procedure: 46
Appendix A: ISBT Guidelines for Beverage Grade Carbon Dioxide 47
Appendix B: CO_2 Gauge Pressure Reference Chart 48
Appendix C: Figuring gauge pressure or blend percentage of CO_2 / N blend . . . 50
Appendix D: Notes on Serving Cask Ale . . . 52
Draught Beer Glossary 54

introduction

Walk into nearly any establishment that serves beer these days and you're likely to find draught beer for sale. Of course, you find well-known brands served through familiar taps. But these days you'll also see fancy options like nitro beers and even some bars with highly spritzy German Weissbier and lightly carbonated English-style "cask" ales. Glassware varies from run-of-the-mill pints to shapely half-liters and diminutive snifters with every possible shape and size in between.

We find draught taps so often that we assume it must be relatively simple to keep and serve beer this way. But behind the simple flick of a handle that sends beer streaming into our glass at the bar you'll find systems that require precise design, exact operating conditions and careful, regular maintenance to ensure the proper flow of high-quality beer.

In this guide, we'll consider the equipment and anatomy of draught systems then look at their operation and maintenance. We'll include a brief discussion of temporary systems such as picnic taps and jockey boxes, but the majority of our attention will be given to systems usually seen in permanent installations: direct-draw and long-draw draught equipment.

While equipment and system layout drive the initial performance of a draught system, other factors play an equal role in the consumer's experience. To help you understand and operate your draught system, we'll look at the balance equation that can keep perfect beer flowing from the taps. We'll also review pouring and glassware cleaning and show you how to check to see if a glass is "beer clean." Finally, we'll focus on the cleaning and maintenance of your draught system. Without regular—and proper—maintenance, your investment in draught technology won't bring you the dividends you expect. We'll conclude this manual by telling you what to look for in proper system maintenance, whether doing it yourself or supervising the work of a supplier.

To present this information, we have divided this manual into two sections. Section I focuses on draught system components and complete system layouts. From a simple party tap to a complex long-draw draught system, we reviewed all the options.

Section II of this manual covers all the operation and maintenance issues for draught systems. It begins with a look at system balance then progresses to the details of pouring, glass cleaning and other essentials of the perfect pint before finishing with cleaning and maintenance. ■

section I

draught equipment and system configurations

Among draught systems, we find three general types based on equipment and design: temporary systems, direct-draw systems and long-draw systems. In the course of this manual, we'll look closely at the layout, operation and maintenance for each system. In Section I of this manual, we present four chapters that focus on system components from faucets to tubing connectors and see how they are assembled to create different systems. Along the way, we'll review important features of each component that can help prevent operating problems or beer quality issues in your system.

Before we jump into the components themselves, let's review some key concepts by looking briefly at the three sub-systems for draught: gas, beer and cooling.

Gas

Draught systems use CO_2 alone or mixed with nitrogen in varying proportions depending on the requirements of the system and the beers being served. When properly selected and set, dispense gas maintains the correct carbonation in the beer and helps to preserve its flavor. In most draught systems, the dispense gas also propels beer from the keg to the faucet. Because the dispense gas comes into direct contact with the beer, it must meet strict criteria for purity. And because of the damage it does, compressed air should never come in contact with beer.

Beer

Most draught systems use the gases mentioned above to drive beer from the keg, through tubing and to the faucet where it will flow into the customer's glass. During the journey from keg to glass, we want to protect the beer from anything that would compromise its flavor or alter the carbonation created by the brewery. The beer should flow through proper beer lines and avoid any contact with brass parts that would impart a metallic flavor. We also want the beer to flow at a specific rate and arrive with the ideal carbonation level.

The key to getting this all right is balance between the applied gas pressure and the resistance provided by the tubing and fixtures the beer passes through during its journey to the bar.

Cooling

The cooling system should hold beer at a constant temperature from keg to glass. Any change between the temperature of the cooler and the temperature of the beer leaving the faucet leads to dispense problems such as foaming. In a simple direct-draw system a refrigerated cabinet maintains the temperature of the keg and provides cooling to the beer as it travels the short distance to the faucet. Many long-draw systems use a walk-in refrigerator to cool the kegs, plus chilled glycol that circulates in tubes next to the beer lines all the way to the faucet, to ensure that the beer stays cold all the way to the glass.

For each draught dispense system, suitable equipment and designs must be chosen for each of these three components—gas, beer and cooling. In Section I of this manual we'll examine the equipment used in draught systems and the various system designs commonly employed.

Chapter 1 examines nine components common to nearly all draught systems, things like couplers, faucets and beer lines. Understanding these basic elements will help you operate every draught system you encounter. Of course, additional components play a role in sophisticated systems—we'll introduce and discuss those as we encounter them in Chapters 3 and 4. Once we've reviewed the common draught components, we'll be ready to see how they get used in various system designs.

The simplest draught systems serve a temporary need. We find these systems at picnics, beer festivals and other short-term events. In **Chapter 2**, we cover the design, set up, use and maintenance of the two main systems: picnic taps and jockey boxes.

Moving to permanent draught installations, direct-draw systems offer the simplest approach. In **Chapter 3**, we'll talk about the anatomy of a keg box or "kegerator" and discuss how this basic approach is implemented in a walk-in cooler design. Both here and in Chapter 4, we'll find some new components beyond the nine "standards" from Chapter 1. In each chapter, we'll learn about the new components before looking at the anatomy of the overall system.

Permanent installations where the kegs cannot be located near the serving bar require long-draw draught systems. **Chapter 4** delves into the anatomy and operation of air-cooled, glycol-cooled and beer-pump approaches to long-draw dispense. ■

Draught Beer Dispense Systems

temporary systems

- Picnic Tap
- Jockey Box

direct draw

- Keg Box
- Walk-in Cooler

long draw

- Air Cooled
- Glycol Cooled
- Beer Pump

chapter 1

essential draught system components

As a prelude to studying different draught system designs, let's review the equipment commonly found in all draught dispense setups, from the backyard picnic tap to the ballpark beer vendor. Here we cover nine components:

- Refrigeration/Cooling
- Keg
- Coupler
- Beer Line
- Faucet
- Gas Source
- Regulator
- Gas Line
- Tailpieces and Connectors

Refrigeration/Cooling

Consistent and controlled beer dispense requires that the beer traveling from keg to glass be maintained at a temperature of 34° to 38°F. While temporary service may employ ice for cooling, most permanent installations employ refrigeration systems.

Cold box refrigeration systems can provide cooling for a small direct-draw box cooler or a large walk-in. The refrigeration itself can either be self-contained with the compressor and condenser mounted on the unit or with a remotely mounted compressor and condenser. Remotely mounting the compressor can benefit the installation by removing the source of heat from inside a room or building; however, this requires additional refrigerant piping and possibly higher cost.

Condenser cooling can utilize either air or water; both methods have their strengths and weaknesses. In warm climates, air-cooled compressors can lose significant cooling capacity on a hot day when it is needed most. Water-cooled systems operate more efficiently but require more maintenance and investment cost. Proper preventive care for either system is imperative, such as regularly cleaning condenser fins for air-cooled systems, and cooling water treatment for water-cooled equipment to prevent condenser fouling, which diminishes cooling capacity. Acid cleaning or "roding" out the heat exchanger may be required to remedy this. Many draught system problems are revealed on the first hot day of the season due to a lack of preventive maintenance. Although R22 refrigerant is still in use, most new installations will utilize a more environmentally friendly substitute such as 404a.

Glycol systems are also used, as we will see when we examine long-draw systems.

Keg

Kegs enable beer transport and dispense while maintaining its quality and integrity. Their design protects beer from both air and light while enabling easy and rapid dispense. Most brewers use kegs made of stainless steel, but you also see rubber-coated, aluminum, steel—and recently plastic—kegs in the marketplace.

When tapped, the keg's valve admits gas to the head space where it applies the pressure needed to push beer up through the spear or down tube and out of the keg.

Older keg designs, although rarely encountered, utilize different tapping methods not covered here. Keg sizes vary from approximately 5 to 15.5 gallons.

Rubber Sided 1/4 Barrel Keg | **Bulged Non-Straight Wall 1/4 Barrel Keg**

AKA	Cylinder	Pony Keg	¼ Barrel	Full-Size Keg
Gallons	5- 5.16	7.75	7.75	15.50
Ounces	661	992	992	1984
# of 12 oz. beers	55	82	82	165
Weight (Full)	58 Pounds	87 Pounds	87 Pounds	161 Pounds

Coupler

Gas flows in and beer flows out of a keg through the coupler. While this device has many casual names in beer cellars around the country, the industry adopted the term "coupler" as the standard term for the device.

When you attach a coupler to a keg to tap it, a probe on the bottom depresses the keg valve (or ball) and allows CO_2 to enter the keg and apply pressure to the beer. This forces the beer to travel up the down tube (spear) and drive the beer to the faucet.

Couplers include two types of one-way valves:

- Thomas valve – This valve allows CO_2 to flow into the keg but prevents the beer from backing up into the gas line if gas pressure drops. This protects the gas regulators from damage.
- Check valve – When the coupler is disconnected from the keg, this valve prevents beer from the beer line flowing out through the coupler. This prevents beer spillage in keg tapping areas.

A keg coupler should also contain an integral pressure relief valve. If excessive gas pressure were applied to a keg, this valve would open to prevent damage to the keg and coupler. The valve can also be opened manually and this should be done periodically to test the safety relief valve. The manual release usually looks like a small metal pin fitted with a wire ring. To test the valve, pull on the ring to slide the pin a short distance out of the coupler and release a small amount of gas.

The diagram below shows all the features of a coupler.

At the time of this writing, most breweries worldwide use one of six variations of the Sankey-brand coupler (see pictures on the next page). Most U.S. breweries use the Sankey "D" coupler, unless otherwise noted.

While not exhaustive, the following list shows the coupler used by various breweries or brands as of this writing. If in doubt, contact the brand's distributor to verify the proper coupler types before tapping.

Cut-away of Sankey "D" Coupler

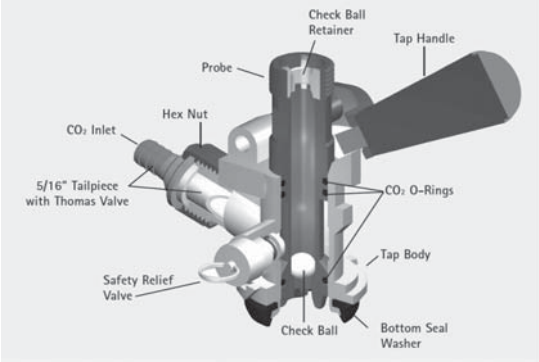

How Coupler Interacts with Keg to Draw Beer

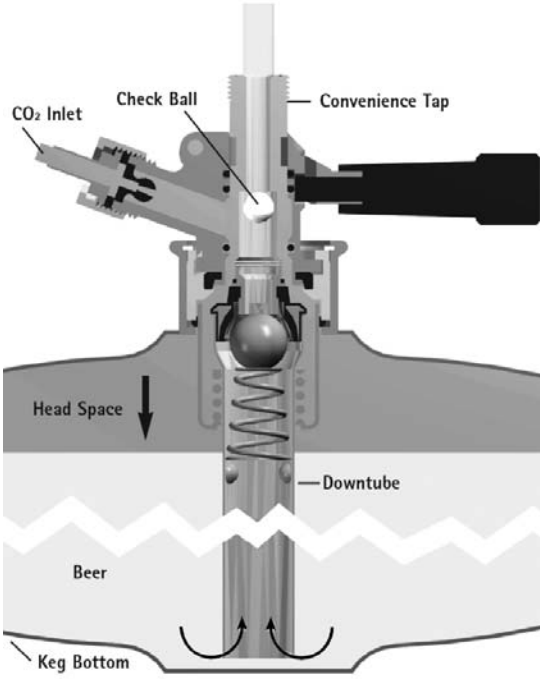

COUPLER TYPE	COUPLER TYPE	COUPLER TYPE	COUPLER TYPE	COUPLER TYPE	COUPLER TYPE
Sankey "D"	**"S"**	**"A"**	**"G"**	**U**	**"M"**
Anheuser-Busch	Amstel	Ayinger	Anchor	Guinness	Schneider
Boston	Becks	Bitburger	Bass	Harp	Veltins
Miller	Belle-Vue	De Koninck	Boddingtons	John Courage	Zwiec
Molson Coors	Erdinger	Fischer	Fullers	Smithwicks	
New Belgium	Heineken	Franziskaner	Grolsch		
Sierra Nevada	Lindeman	Hacker-Pschorr	Old Speckled Hen		
Boulevard	Lion Nathan	Hoegaarden	Tennents		
Almost all U.S. breweries unless noted	Marston's	Isenbeck	Watney's		
	Moretti	Lowenbrau			
	Murphy's	Paulaner			
	Pilsner Urquell	Spaten			
	Piraat	Starpramen			
	Saint Pauli Girl	Victoria			
	Scottish & New-castle	Warsteiner			
	Stella Artois	Weihenstephan			
	Tetley's				
	Tooheys				
	Youngs				

Beer Line

Between coupler and faucet, beer travels through beer line selected to fit the needs of the specific draught application. Options range from vinyl to specialized barrier tubing and even stainless steel.

Most draught systems use clear vinyl tubing for all or part of the beer line. In picnic and direct-draw systems, beer often runs most or the entire route from coupler to faucet in vinyl tubing. In long-draw systems, beer commonly passes through two sections of vinyl hose but travels most of the way in special barrier tubing (See Chapter 4). While vinyl tubing is highly flexible, it is best used where lines are not secured in place and where it can easily be replaced.

In later pages, we will encounter other types of tubing such as:

- Colored vinyl and braided vinyl used for CO_2 gas
- Stainless steel tubing found in jockey boxes and tap towers
- Barrier tubing; a low-resistance, easy-to-clean beer line for long-draw systems
- Polyethylene tubing used to carry glycol coolant

Vinyl

Barrier

Polyethylene

Faucet

Faucets dispense beer to the glass. They also hold the tap marker to identify the type of beer being dispensed. The most common faucets are generally suitable for dispensing both ales and lagers. The most common or "standard" US faucet is rear-sealing and has vent holes that need to be carefully cleaned and inspected during routine cleanings. Ventless, or forward-sealing faucets, are easy to clean and are only available in stainless steel. Several other designs are now becoming widely available and are used either for their aesthetic appeal or for serving a specific style of beer.

Stout faucets are used for nitrogenated beers, typically stouts. These faucets use a diaphragm and restrictor plate to "cream" the beer.

Standard

European

Flow Control

Stout

Ventless

Pros and Cons of Various Faucet Designs

Type	Valve	Flow	Pro	Con
Traditional vented	Vertical, seals in back of barrel	Smooth	Low velocity	Barrel interior susceptible to microbial growth
Vent-free	Vertical, seals in front of barrel	Slightly twisting	Low susceptibility to microbe growth	Higher velocity flow
Spring-loaded, cam-actuated	Horizontal, top of nozzle	Slightly twisting	Low susceptibility to microbe growth	Many small parts to clean
Roto-faucet	Internal, rotating ball	Rapid velocity	Few parts, simple to clean	Some flow turbulence
Nitro-beer	Top, plunger style	Cascade of tiny bubbles	Gives unique texture needed for nitro beers	Small nozzle parts require manual cleaning. Use only with nitro beers.
Speed-nozzle attachments	Attaches to traditional vented faucet	Rapid flow	Increases pour rate for high volume dispense	Nozzle immersed in beer, compromising hygiene standards

Faucet Designs - Standard and Ventless

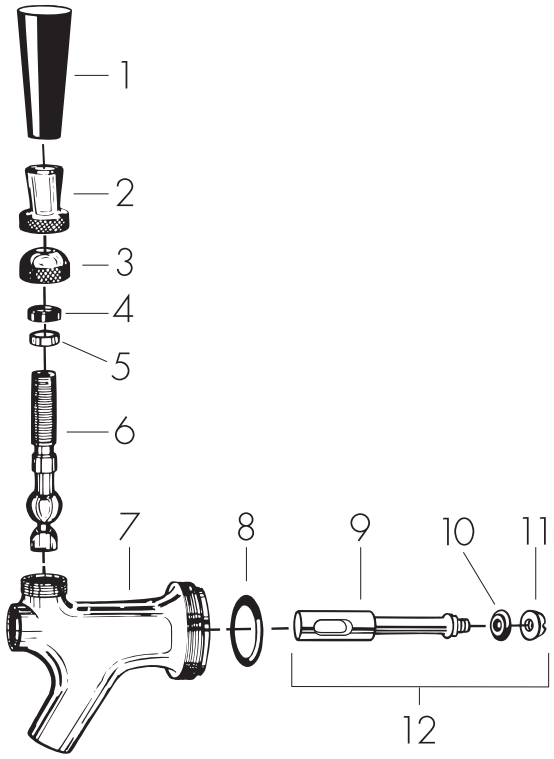

Standard

1.....Faucet Knob
2.....Lever Collar
3.....Lever Bonnet
4.....Friction Washer
5.....Ball Washer
6.....Lever
7.....Body
8.....Coupling Washer
9.....Shaft
10.....Shaft Seat
11.....Shaft Nut
12.....Faucet Shaft Assembly

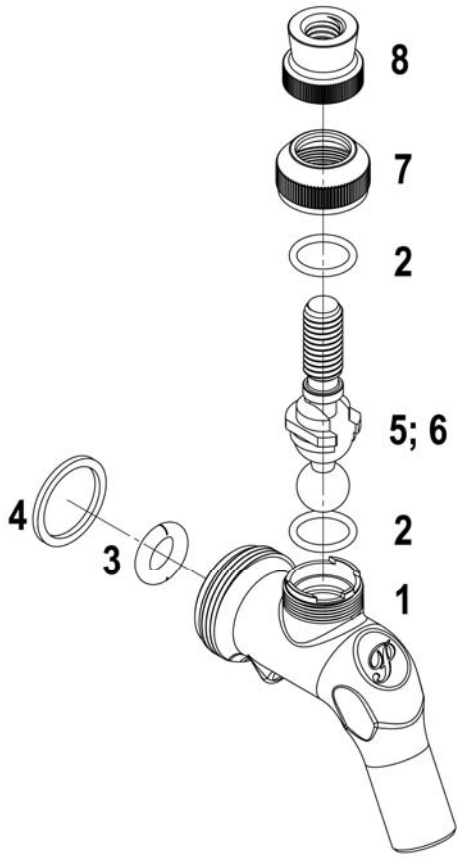

Ventless

1.....Faucet Body
2.....O-Ring
3.....O-Ring Seat
4.....Coupling Gasket
5.....Handle Lever
6.....Bearing Cup
7.....Compression Bonnet
8.....Handle Jacket

Gas Source

Draught systems depend on gas pressure to push beer from the keg to the faucet. To achieve this, kegs should be pressurized with carbon dioxide, or a carbon dioxide and nitrogen mix.

Gas selection and purity affect the freshness and quality of the beer served through the draught system. Remember: The gas you use fills the keg as the beer drains. Thus, off-flavors or impurities in the gas quickly migrate to the beer to spoil its freshness and flavor. Compressed air should never be used to pressurize a keg as the oxygen in the air generates stale flavors in beer within just a few hours. All gas used for beer dispense should meet the specifications of the International Society of Beverage Technologists or the Compressed Gas Association (See Appendix A).

Direct-draw applications use straight CO_2 except for the dispensing of "nitro" beers where an appropriate nitrogen/CO_2 mix must be used. Nitrogen is available in cylinders or can be generated on site.

Gas used for draught dispense should be "beverage grade." Retailers may purchase this gas in cylinders that will be delivered by the gas vendor and swapped out when empty. Such cylinders are filled, maintained and inspected by the vendor. High volume users may purchase a bulk gas vessel known as a Dewar that will be filled on location from a bulk gas truck. Bulk tanks can provide CO_2 for both soda and beer.

CO_2 tanks contain both liquid and gas phases. The tank pressure is dependent on ambient temperature and—regardless of tank fill level—will vary from 600 – 1200 psi until empty. CO_2 tanks should never be located inside the refrigerator or walk-in cooler. A gas filter may be installed to help reduce the likelihood that any contaminants in the gas reach the beer.

No Air Compressors, Please!

Systems that use compressed air as a dispense gas expose beer to oxygen, which produces stale paper- or cardboard-like aromas and flavors in the beer. Brewers go to great lengths to keep oxygen out of beer to avoid these undesirable stale characteristics. Air compressors also push contaminants from the outside atmosphere into the keg, increasing the chance of beer-spoiling bacteria and off-flavors. For these reasons, compressed air should never be used in direct contact with beer.

Note: Breathing high concentrations of CO_2 can be deadly! Take care to prevent CO_2 buildup in enclosed spaces such as cold boxes. System leaks or beer pumps using CO_2 can cause this gas to accumulate in the cooler. To prevent this, beer pumps driven by CO_2 must be vented to the atmosphere. CO_2 warning alarms are available and recommended for installations with enclosed areas such as cold boxes containing CO_2 fittings and gas lines.

Braided Vinyl

Gas Line

Gas line should be selected to withstand the pressures expected in the draught system. We saw that

vinyl tubing often serves as beer line and vinyl of some type often serves as gas line. Often vinyl gas line has greater wall thickness than vinyl beer line. To help distinguish between gas line and beer line, colored vinyl is used for CO_2 supply lines in some systems. But clear vinyl may be used as it aids in troubleshooting by allowing you to see if beer has escaped the coupler and entered the gas line due to a faulty or missing Thomas valve.

Braided vinyl is often used for CO_2, particularly in high pressure situations (50+ psi) and in long CO_2 runs. Braided vinyl is commonly used in soft drink lines for both beverage and gas.

Regulator

A regulator adjusts and controls the flow of gas from any source. Each regulator typically has at least one and often two pressure gauges that help in setting pressures and monitoring gas levels. Valves and an adjustment screw control the actual flow of gas from source to destination.

All gas systems employ a primary regulator attached to the gas source, namely a portable bottle or bulk tank. This regulator typically contains two gauges: one high-pressure showing the tank or supply pressure, and a second low-, or regulated pressure gauge showing what is being delivered to the keg. Some simpler regulators may only contain one gauge displaying the delivered pressure, making it more difficult to predict when the bottle is getting low on CO_2. Some suppliers provide jockey box regulators pre-set with no gauges, since these are easily damaged in transit.

Primary CO_2 Bottle Regulator

Primary Nitrogen Bottle Regulator

Secondary Regulators

Regulators are attached to the gas bottle with either an integrated "O" ring seal in the face of the regulator fitting, or a fiber or Teflon flat washer. These parts need to be replaced occasionally to prevent leaks and should be inspected every time the bottle is changed. Many regulators are also equipped with one or more shut-off valves located on the low-pressure outlet, allowing the CO_2 to be shut off without changing the set-screw or shutting off the main tank valve.

A primary regulator must also contain a safety relief valve to prevent dangerous system pressures in case of a malfunction or frozen regulator. Bottled CO_2 pressure can exceed 1000 psi, creating an extreme hazard if not handled properly.

Nitrogen regulators are designed for higher pressures and have a male thread with a conical fitting that (depending on the design) seats with or without an O ring.

Pressure gauges used on draught systems measure in pounds-per-square-inch gauge, or "psig." (Gauge pressure is 14.7 psi less than absolute pressure.) When dispensing beer at elevation, the carbonation level of the beer doesn't change but the pressure displayed on the gauge will read low, by approximately 1 psi per every 2000 ft. So a keg dispensed at 10,000 ft. would need to have the gauge pressure increased by approximately 5 psig above the calculated dispense pressure at sea level.

Tail Pieces and Connectors

Tail pieces connect couplers, wall bracket, shanks—or any other piece of equipment—to vinyl tubing or other types of beer line. Chromed brass and stainless steel tail pieces come in several sizes to match common tubing diameters. They are held in place with a nut and sealing washer. A clamp secures the tubing to the tailpiece on the barbed side. A nut and sealing washer attach the tailpiece to the coupler or other equipment on its flat side.

Tail Piece

Sealing washer

Hex Nut

Wing Nut

Step-less hose clamp

A Word about Metal Parts

For many years, suppliers made metal parts for draught systems with chrome-plated brass. While chrome has no negative effect on beer quality, beer that has any contact with brass reacts and picks up a metallic off-taste. Exposed brass is also difficult to clean. While the chrome coating on these parts rarely wears away on the outside, cleaning and beer flow eventually exposes the brass on the inside of these parts, bringing the beer in contact with the brass.

To avoid brass contact, brewers recommend stainless steel parts for draught dispense. In addition to being inert in contact with beer, they are easier to clean and thus help to maintain high quality draught dispense.

Manufacturers offer all faucets, shanks, tailpieces, splicers, wall brackets and probes mentioned in this manual in stainless steel. If your system already contains chrome-plated brass components, inspect the beer contact surfaces regularly for exposed brass and replace those components immediately when this is detected. ■

chapter 2

temporary draught dispense

draught beer goes great with outdoor events, but the temporary setting prohibits use of traditional direct-draw or long-draw draught equipment. Instead, we usually use one of two different systems: picnic pumps or jockey boxes.

Plastic Metal with CO_2 Cartridge

Picnic Pumps

Picnic pumps or party taps allow draught beer dispense for a one-day occasion or event. These systems compromise accepted standards of draught dispense in order to offer a simple method for serving draught beer.

In the simplest systems, the beer flows to a simple plastic faucet attached to short section of vinyl hose. Gas pressure comes from compressed air introduced by way of a hand-operated pump integrated into the coupler. The pictures above show plastic- and metal-construction examples of a picnic tap.

Since these systems introduce compressed air into the keg, they are only suitable for situations where the beer will be consumed in a single day. Also, these dispensing systems typically do not produce the best serving results, since balancing the correct top pressure is very imprecise. For best results, the keg must be kept in ice and consistently—but not excessively—pumped as the contents are dispensed.

Improved designs use single-use CO_2 cartridges with an integrated regulator. These units may also include a traditional vented faucet mounted on a short length of stainless steel beer line. This design overcomes the key shortcomings of hand-pumped picnic taps.

Jockey Boxes

Jockey boxes offer another way to improve on the picnic tap as a solution for portable dispense. Here, a

normal coupler is attached to the keg and CO_2 is used to pressurize the system. Beer in route from keg to faucet passes through a cold plate or stainless steel tubing inside an ice chest in order to cool it to the proper dispense temperature. A cold-plate-equipped jockey box uses ice to cool beer flowing through the cold plate. A jockey box equipped with stainless steel coils uses ice and water to chill beer flowing through the coil.

These systems are not appropriate for day-to-day use, as draught beer is perishable and room temperature storage accelerates that process. Partial kegs remaining from temporary service are not usable in other settings.

Jockey Box Setup and Use

Coil-style jockey boxes pour beer at a faster rate than those equipped with a cold plate. Thus, they better suit situations where you need higher volumes or faster pours. The cold plate style is appropriate for beer dispensed at a slower rate.

Kegs used with a cold plate should be iced if the ambient temperature is above 55°F since they have limited cooling capacity; however, coil boxes can pour beer efficiently even with the kegs at room temperature (64° – 74°F). If the ambient temperature is above that, the coil-box kegs should be iced as well.

Setup affects the efficiency of both jockey box styles.

To set up a cold plate:

- **Tap** the keg and run beer through the faucet before adding ice to the jockey box. This removes water left behind during the cleaning process before temperatures in the plate get cold enough to freeze it causing turbulence or blockage of the beer flow.
- **Place** ice both underneath and on top of the cold plate in the ice chest. As time passes, the ice will "bridge" and should be removed for better contact with the cold plate. Ice should be added periodically and water drained from the ice chest.
- **Set** CO_2 pressure to 30 to 35 psi.

To set up a coil box:

- **Tap** the keg and run beer through the coil and out the faucet.
- **Add** ice to the ice chest and completely cover the coil.
- **Add** cold water to the top of the coil. This causes an ice bath giving excellent surface contact.
- **Set** CO_2 pressure to 35 to 40 psi on 120 ft. coils. Shorter coils are not recommended, but if used, should dispense at 30 – 35 psi.

Cleaning and Maintenance

When cleaning jockey boxes, the water in the lines must be blown out to prevent mold growth.

- If the re-circulation pump is capable of being run dry:
  - Before breaking down re-circulation loop, remove inlet from rinse water with pump running so air pushes out all of the rinse water in the lines.
- If the re-circulation pump is **not** capable of being run dry:
  - After breaking down the re-circulation loop and reattaching faucets, tap an empty cleaning canister and use the gas pressure to blow all of the water out of the lines. ■

chapter 3

equipment and configurations for direct draw draught systems

Retailers use direct-draw systems in situations where the kegs can be kept refrigerated in very close proximity to the dispense point or faucet. In some cases, the beer sits in a cooler below the counter at the bar. In other cases, the keg cooler shares a wall with the bar, keeping the beer close to the point of dispense. Let's look at these two types of direct-draw systems:

- A self-contained refrigerator (keg box or "kegerator") where the number of kegs accommodated will vary based on box and keg sizes.
- A walk-in cooler with beer dispense directly through the wall from the keg to the faucet.

The nine components discussed in Chapter 1 appear in both direct-draw systems; only a little additional equipment comes into play. As with temporary systems, most direct-draw systems employ vinyl beer line and pure CO_2 gas.

As permanent installations, direct-draw systems typically include a drip tray and some systems also incorporate

Direct Draw Kegerator

Walk-in Cooler

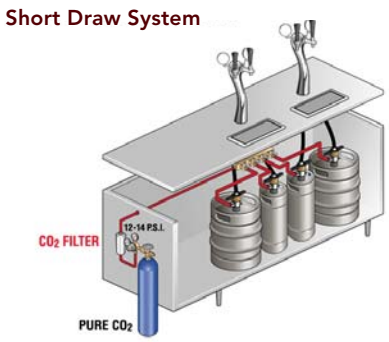

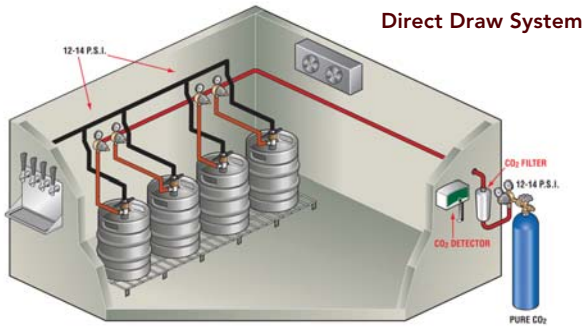

a tap tower. In addition, shanks support the faucets in either tower or wall-mount applications. The following sections discuss these elements of the system.

Drip Tray

Many draught systems include a drip tray placed below the faucets and most health departments require them.

Surface Mount Drip Tray

Wall Mount Drip Tray

Many walk-in based direct-draw systems use a wall mounted drip tray that includes a back splash. This design may be used on some air-cooled long-draw systems as well. Bars typically place surface or recessed drip trays under draught towers. The drip trays should be plumbed to drain into a drain or floor sink.

Towers

Direct-draw keg boxes and most long-draw systems mount the dispensing faucet on a tower. This tower attaches to the top of the bar or keg box. Towers come in various shapes and sizes and may have anywhere from one to dozens of faucets.

To achieve proper beer service, the beer line running through the tower to the faucet must be kept at the same temperature as the beer cooler. Direct-draw systems use air cooling while long-draw systems usually use glycol cooling. The air-cooled towers are insulated on the inside and cold air from the cooler circulates around the beer lines and shanks. This works with direct-draw systems thanks to the close proximity of the tower to the cold box.

Glycol towers attach coolant lines in parallel to the beer lines (typically stainless) and surround them tightly with insulation. This cooling method allows towers to be located remotely from the cold box, up to several hundred feet away.

Bent Tube Shank

Nipple Shank

Shanks

Most draught systems firmly mount the faucet to either a tower or a wall, making it a stable point for beer dispense. A threaded shank with securing nuts creates the solid connection to the supporting tower or wall. The faucet then connects to one side of the shank and beer line connects to the other side by either an attached nipple or a tail piece connected with the usual washer and nut. ■

Two-Faucet Tower (forced-air or glycol)

Eight-Faucet Pass-Thru (forced-air or glycol)

chapter 4

equipment and configurations for long-draw draught systems

The most complex draught systems fall into the long-draw category. Designed to deliver beer to bars well away from the keg cooler, these systems usually employ equipment not seen in temporary and direct-draw setups. While long-reach systems offer designers the option to put beer far from the bar providing keg handling or layout flexibility, the distances they cover come with increased opportunities for problems and increased costs for equipment, cooling and beer waste. Here—as with all systems—minimize line length to minimize beer loss and facilitate cleaning.

Let's consider the three draught dispense sub-systems of beer, gas and cooling to see what long-draw systems include.

Beer

While exceptions exist, most long-draw systems still push beer from kegs. Beer exits the keg through a coupler and usually enters a vinyl beer line just as we have seen with temporary and direct-draw systems. But here the vinyl doesn't last long. It typically goes about six ft. before connecting to a wall bracket which serves as a transition to specialized barrier tubing. Designed for minimum resistance and superior cleanliness, barrier tubing should carry beer most of the distance from keg to faucet in long-draw systems. But barrier tubing isn't the end of the journey; most draught towers use stainless steel tubing to carry the beer to the faucet. In addition, many systems install some length of narrow-gauge vinyl tubing called "choker" between the end of the barrier tubing and the stainless steel tubing of the draught tower, to provide a way to accurately balance the system. In the end, however, the beer flows through a faucet just as we saw with the direct-draw systems.

You may also find Foam On Beer (FOB) detectors on the beer lines of many long-draw systems. Located in

Long-Draw System

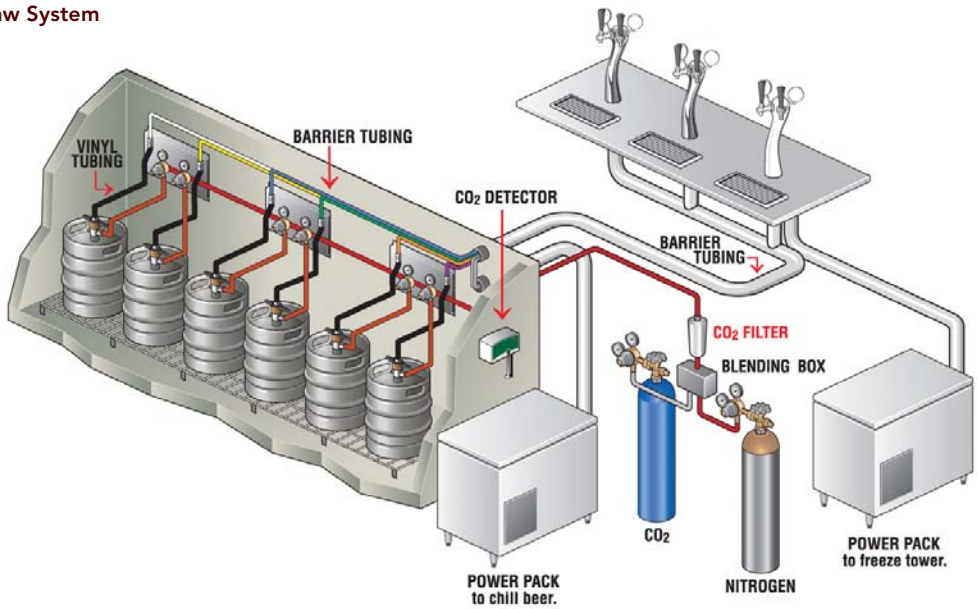

the cooler at or near the wall bracket, these devices detect empty kegs and shut off flow to the main beer line. This prevents beer loss by keeping the main beer line full of pressurized beer while the keg is changed. The jumper line between the keg and FOB is then purged and normal beer service can resume.

Components:

Barrier Tubing

Barrier tubing has a "glass-smooth" lining that inhibits beer or mineral stone deposits and microbial growth to maintain beer freshness. Its properties make it the only industry-approved beer line for long-draw systems.

Barrier tubing may be purchased by itself in various diameters but most suppliers sell it in prepared bundles (called bundle or trunk housing) with beer lines and glycol coolant lines wrapped inside an insulating cover. These bundles vary by the number of beer lines they carry with popular sizes matching the number of faucets commonly found on tap towers.

Many older long-draw systems installed single-wall polyethylene tubing. This relatively porous material allows beer oxidation during extended pouring delays and makes cleaning difficult. Today, you may find blue and red polyethylene tubing carrying glycol from and to your glycol power pack and is the only recommended use for polyethylene tubing in long-draw systems.

Wall Brackets

Wall brackets join tubing together in a long-draw cold box. The wall bracket gives a solid connecting spot for jumper lines from the keg. Tubing is connected with a washer, nut, tail piece and clamp combination. (Most of these installed in the past were made of plated brass, and should be inspected for wear and replaced with stainless steel.)

One-Faucet Wall Bracket

Two-Faucet Wall Bracket

FOB (Foam On Beer)

FOBs stop the flow of beer through a line once the keg empties. This reduces the beer loss normally associated with changing a keg and therefore reduces operating costs. While available in different designs, all feature a float in a sealed bowl that drops when beer flow from the keg stops. The FOB allows the beer lines to stay packed. This makes for less product loss and generates savings for the account. FOBs should be cleaned every two weeks when the draught system is cleaned and completely disassembled and manually cleaned quarterly to assure a clean system.

Stainless Steel FOB

Plastic FOB

Plastic FOB

Beer Pumps

Beer pumps draw beer from a keg or other beer-serving vessel and deliver it to the faucet. Rather than using gas pressure to drive beer, beer pumps use mechanical force to propel the beer through the system. We find beers pumps in draught systems when working pressures for gas dispense get too high. This includes very long runs (>200 ft.) or high vertical lifts.

We also see them used on multi-barrel brewpub serving tanks that have low-pressure limits.

Beer pumps themselves are powered by high-pressure gas or compressed air that does not come into contact with the beer. Of course, some portion of the pump contacts the beer and like anything else, it must be regularly cleaned to prevent beer stone build-up and microbial infection.

Beer pump setups require two operational pressures: CO_2 pressure on the keg or tank to maintain beer carbonation and separate gas pressure to the pump to propel the beer to the faucet.

- Proper CO_2 pressure should be applied to the keg or tank to maintain the beer's carbonation level (See Appendix B).
- The pump pressure is then set to equal system resistance. Here the only caveat is that this pressure must at least equal that required to maintain carbonation in the keg in order to prevent carbonation breakout in the beer lines.

Quick-Connect (or Push) Fittings

Special fittings can join the different types of beer line found in long-draw systems. Quick-connect fittings work on hard or rigid tubing including polyethylene (used for glycol), barrier line and stainless tubing. Couplers attach to square-cut tubing ends with an O-ring and gripper. Adding a vinyl adapter to the coupler allows for transition from barrier or stainless to vinyl tubing.

Coupler

Vinyl adapter

Gas

To push beer across the distances found in long-draw systems usually calls for gas pressures well above what is needed to maintain beer carbonation levels.

Most long-draw systems employ a nitrogen-CO_2 blend to prevent over-carbonation of the beer. The exact blend needed will depend on the system parameters and operating pressure. The correct blend might be purchased pre-mixed or custom blends can be mixed onsite from separate nitrogen and carbon dioxide sources. The use of custom gas blends brings new equipment into play, including nitrogen generators and gas blenders.

Single Blend - Blender

Double Blend - Mixer

Pre-mixed cylinders containing a mix of between 70-75% nitrogen and 30-25% CO_2 are intended for use with nitrogen-infused beers or "nitro" beers. These blends are not intended for use with regularly carbonated beers (those with more than 2.0 volumes or 3.9 grams/liter of CO_2), even in high-pressure long-draw systems. Use of "nitro" beer gas on regular beers causes the beers to lose carbonation in the keg, resulting in flat beer being served within three to five days. The flat beer is most noticeable near the end of the keg with the amount of flat beer increasing the longer the beer is in contact with this gas. Similarly, straight CO_2 should not be used to dispense nitro beers.

Straight CO_2 should only be used in a long-draw system when ideal gauge pressure is sufficient to produce the proper flow rate and there is absolutely no temperature increase in the draught lines outside the cooler. Since ideal dispense pressure with straight CO_2 is relatively low, even a slight temperature increase from the keg cooler to the draught line can allow the CO_2 to escape from the beer in the draught line, causing foamy beer at the tap.

In some long-draw systems gas plays an entirely different role, powering beer pumps used to move the beer.

Gas Blenders

Gas blenders mix pure tank CO_2 and pure tank nitrogen to a specified ratio. Blenders can be ordered to specific ratios and often provide two blends: one for ale/lager and one for nitrogenated beers. Recommended features for a gas blender include:

- Output mix is preset by the manufacturer and is not adjustable on site.
- Blender shuts down when either gas supply runs out, preventing damage from running on only one gas.
- Blender produces two blends so that both "nitro" and regularly carbonated beers can be served. The blend for regularly carbonated beers can adequately serve products with a reasonable range of CO_2 volumes (e.g. 2.2-2.8 volumes of CO_2).

Nitrogen Generator

Nitrogen Generator w/blender

Nitrogen Generators

Nitrogen generators extract nitrogen from the atmosphere. Air is supplied by either a remote or integrated air compressor. Nitrogen generators are typically equipped with a built-in gas blender.

To protect nitrogen purity from compromising draught beer quality, nitrogen generators should have the following features:

- Produce nitrogen with a purity of at least 99.7%.
- Have air inlets equipped with both an oil/water filter and a sterile air filter.
- Use "oil-free"-type air compressors

All nitrogen generator filters should be inspected and replaced according to the manufacturer's specification.

Gas Filters

Beverage grade CO_2 comes from many commercial and industrial operations and is supplied for many uses beside beverages. (i.e., fire extinguishers, welding, food processing, etc.) CO_2 bottles can be contaminated by poor handling and storing. They can be contaminated by beer or soft drinks if a check valve malfunctions and the beer or soft drink flows back into an empty CO_2 bottle. A gas filter helps safeguard beer by removing unwanted impurities or contaminants from the gas. Filters must be replaced periodically per manufacturer's instructions.

Nitrogen Gas (N_2)

Nitrogen gas (N_2) is blended with CO_2 to aid in dispensing beers in systems requiring delivery pressures above CO_2 equilibrium. Nitrogen is not easily absorbed by beer. As an inert gas, it does not degrade the flavor of the beer, making it perfect for blending with CO_2. The blend of gases is one option for dispensing beer over long distances without over-carbonating the beer in the keg. Blended gases are also necessary for dispensing nitrogenated beers.

Blended Gas Bottles

Blended gas bottles are vendor-mixed CO_2 and nitrogen gas mixes. These blends are typically available in blends of approximately 75% nitrogen 25% CO_2, used to dispense nitrogenated beers. In some markets, blends of approximately 60% CO_2 40% nitrogen may also be available as a premix and custom blends may be ordered from some vendors.

Cooling

As with direct-draw systems, kegs reside in a walk-in cooler held at 34° to 38°F. But to keep beer cold throughout its journey from keg to faucet requires additional cooling components that surround the beer lines themselves. We find two common designs: air-cooled and glycol-cooled.

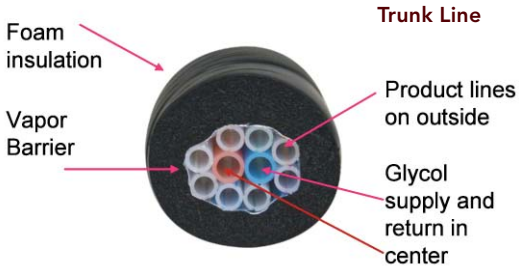

In a **forced-air** long-draw system, beer lines travel through a tube or chase kept cold by a continuously operating recirculation fan. The fan pushes cold air from a condensing unit inside the cooler into and through the ductwork. In both single-duct and double-duct systems cold air travels a route from the cooler to and through the tap tower as well as a return route back to the cooler. Single-duct systems use a tube-in-tube design effective for runs of up to 15 ft. Runs of up to 25 ft. can be created using double-duct systems where separate tubes carry the outbound and return flows.

Glycol-cooled systems service runs longer than 25 ft. Here, a separate chiller pumps cold food-grade liquid propylene glycol through cooling lines parallel to and in contact with the beer lines. These systems require well-insulated and carefully configured trunk line (See photo). Each beer line (usually barrier line) in a trunk touches a glycol line to keep the beer cold as it travels from keg to the faucet.

In addition to the glycol chiller used to maintain temperature of the beer lines, some systems use a separate glycol cooling system to chill the tap tower. ■

Glycol Chiller

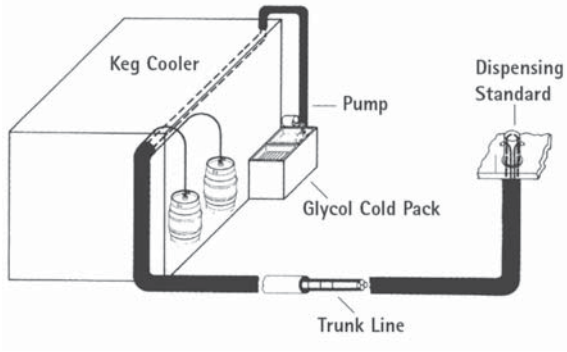

Typical Long-Draw Glycol System

section II

draught operations

draught systems from simple to complex can deliver high-quality beer—but only when operated properly and suitably maintained. Many who work with draught will never have the chance to buy or install the system components we have discussed in Section I, but all will pour beer from the faucet and nearly everyone will experience foaming or other problems at some time that can be traced to operating conditions. In Section II of this manual, we consider all the issues involved in operating a draught system and serving the customer a top-quality draught beer.

In Chapter 5, we focus on the heart of draught operation by looking at the dynamics of carbonation, pressure and system resistance. By understanding these concepts and their relationship with each other, you'll be much better equipped for successful draught system operation.

Chapter 6 covers practical issues related to the cooler and other "behind the scenes" aspects of beer service. Chapter 7 looks at glass cleaning and the proper way to pour a beer.

Chapter 8 concludes our discussion of operating issues by taking a close look at maintenance and cleaning. Whether you clean your system yourself or hire an outside service, you owe it to yourself to understand proper cleaning methods. Without this knowledge, you can't defend against a decline in beer quality at your establishment. ■

chapter 5

a matter of balance

All beer contains dissolved carbon dioxide. Brewers control the amount of it in each beer to influence the overall character of the beer. For beer servers, its presence can be both a blessing and a curse.

Ideally, we deliver beer to the consumer's glass while maintaining its CO_2 content. When this happens, the beer pours "clear" without foaming and we create a pleasing head on the beer without waste. But too many draught systems fail at this goal. Foamy beer comes out the faucet and servers overflow the glass trying to get a decent pour. Beer quality and retailer economics both suffer.

To put beautiful, high-quality beer in the glass and maximize retailer profits, we must consider the concepts of balance and how they apply to draught systems. This chapter introduces the concepts then looks at some practical examples.

Components of Balance

To understand and manage draught system balance, we'll look at four measurements: beer temperature, applied pressure, resistance and beer carbonation level.

We measure **beer temperature** in degrees Fahrenheit. Just remember that we want to know the temperature of the actual beer. Since it takes a keg of beer many hours to stabilize at the temperature of the cooler, the beer temperature can vary quite a bit from the setting of the thermostat in your cooler. (See the section entitled "Cold Storage and Proper Chilling of Kegs before Serving" for further details.)

We measure **applied pressure** in pounds per-square-inch-gauge abbreviated as "psig," or often just "psi." The pressure applied to any keg is shown by the gas regulator attached to it.

Resistance comes from components like the beer line and changes in elevation as the beer flows from keg to glass. We measure resistance in pounds and account for two types: static and dynamic.

Static resistance comes from the effect of gravity, which slows beer being pushed to a level above the keg. Each foot of increased elevation adds approximately 0.5 pound of resistance to a system. If the beer travels to a faucet below the keg level, each foot of decreased elevation subtracts 0.5 pound of resistance from the system. The gravity factor remains the same regardless of tube length, bends, junctions or other

configuration issues. When the keg and faucet heads are at the same height, there is no static resistance and this factor has a value of zero.

Dynamic resistance comes from all the beer components in a system. Items like couplers and faucets have specified resistance values. Beer lines provide a certain resistance for each foot the beer travels. We have mentioned beer lines made from vinyl, barrier tubing and even stainless steel. Each type and diameter has a different resistance (stated as "restriction") to beer flow as shown in the nearby chart. (Note: This chart is provided as an example only. Please consult your equipment manufacturer for values suited to your beer lines and system components.)

BEER TUBING			
Type	**Size**	**Restriction**	**Volume**
Vinyl	3/16" ID	3.00 lbs/ft	1/6 oz/ft
Vinyl	1/4" ID	0.85 lbs/ft	1/3 oz/ft
Vinyl	5/16" Id	0.40 LBS/ft	1/2 oz/ft
Vinyl	3/8: ID	0.20 lbs/ft	3/4 oz/ft
Vinyl	1/2" ID	0.025 lbs/ft	1-1/3 oz/ft
Barrier	1/4" ID	0.30 lbs/ft	1/3 oz/ft
Stainless	5/16" ID	0.10 lbs/ft	1/2 oz/ft
Stainless	3/8" ID	0.06 lbs/ft	3/4 oz/ft
Stainless	1/4" OD	1.20 lbs/ft	1/6 oz/ft
Stainless	5/16" OD	0.30 lbs/ft	1/3 oz/ft
Stainless	3/8" OD	0.12 lbs/ft	1/2 oz/ft

Brewers measure beer **carbonation** in volumes of CO_2. A typical value might be 2.5 volumes of CO_2 meaning literally that 2.5 keg-volumes of uncompressed CO_2 have been dissolved into one keg of beer. Carbonation levels in typical beers run from 2.2 to 2.8 volumes of CO_2, but values can range from as little as 1.2 to as high as 4.0 in specialty beers.

Now that we understand the concepts of beer temperature, applied pressure, resistance and carbonation, let's look at how they all interact in a draught system.

Carbonation Dynamics

Beer carbonation responds to changes in storage and serving conditions. Let's consider an average keg with a carbonation of 2.5 volumes of CO_2 and see what happens when conditions change.

Beer temperature and the CO_2 pressure applied through the coupler influence the amount of CO_2 dissolved in any keg of beer. At any temperature, a specific pressure must be applied to a keg to maintain the carbonation established by the brewery. If temperature or pressure varies, carbonation levels will change. Here's an example.

Beer in a keg at 38°F needs a pressure of 11 psi to maintain 2.5 volumes of CO_2 as the beer is served. So long as the temperature and pressure remain constant, the beer maintains the same carbonation level.

		CO_2 pressure		
		9 psi	**11 psi**	13 psi
Temp	34 °F	2.5	2.7	2.9
	38 °F	2.3	**2.5***	2.7
	42 °F	2.1	2.3	2.5

* Pressures rounded for purposes of illustration.
Do not use these charts for system adjustment.

If the temperature of the beer changes, so does the required internal keg pressure. Here we see that if the pressure remains at 11 psi but the temperature of the beer rises to 42°F, carbonation will begin to move from the beer to the headspace. Over a few days and as the keg empties, the overall carbonation in the beer drops to 2.3 volumes of CO_2.

		CO_2 pressure		
		9 psi	**11 psi**	13 psi
Temp	34 °F	2.5	2.7	2.9
	38 °F	2.3	2.5*	2.7
	42 °F	2.1	**2.3**	2.5

Alternately, if the temperature remains at 38°F, but the CO_2 pressure increases to 13 psi, then the carbonation level of the beer in the keg will increase as the beer slowly absorbs additional CO_2.

		CO_2 pressure		
		9 psi	11 psi	**13 psi**
Temp	34 °F	2.5	2.7	2.9
	38 °F	2.3	2.5*	**2.7**
	42 °F	2.1	2.3	2.5

The "ideal gauge pressure" for a beer is the pressure at which CO_2 is not diffusing from beer into the headspace and excess CO_2 is not absorbing in the beer. This value varies from account to account depending upon factors such as temperature, altitude and carbonation level of the beer. Because beer carbonation can vary with the temperature of your cooler and the pressure applied to the keg, you must take care to maintain steady values suited to your system and beers.

You can determine ideal gauge pressure for pure CO_2 from the chart shown in the table below and in Appendix B. If you do not know the carbonation level in the beer, you can estimate it using the procedure found in Appendix B.

System Balance

So far we've seen what happens to a beer's *carbonation* in the keg as the result of *applied pressure* and *temperature*. But of course beer must travel from the keg to the glass and along the way it encounters the fourth measure we introduced, namely *resistance*. The beer line and changes in elevation impart resistance to the flow of beer from the keg to the faucet.

The pressure applied to the keg overcomes this resistance and drives the beer through the system and to the customer's glass. To achieve proper flow and beer quality, the pressure applied to the keg must equal the total resistance of the draught system.

We have already seen that the pressure applied to the keg needs to be matched to the carbonation level

Draught System Balance

When applied pressure equals resistance, a draught system will pour clear-flowing beer at the rate of 2 ounces per second.

Determination of CO_2 application pressure given volumes of CO_2 and temperature

Vol. CO_2	2.1	2.2	2.3	2.4	2.5	2.6	2.7	2.8	2.9	3.0	3.1
Temp. °F	PSI	PSI	PSI	PSI	PSI	PSI	PSI	PSI	PSI	PSI	PSI
33	5.0	6.0	6.9	7.9	8.8	9.8	10.7	11.7	12.6	13.6	14.5
34	5.2	6.2	7.2	8.1	9.1	10.1	11.1	12.0	13.0	14.0	15.0
35	5.6	6.6	7.6	8.6	9.7	10.7	11.7	12.7	13.7	14.8	15.8
36	6.1	7.1	8.2	9.2	10.2	11.3	12.3	13.4	14.4	15.5	16.5
37	6.6	7.6	8.7	9.8	10.8	11.9	12.9	14.0	15.1	16.1	17.2
38	7.0	8.1	9.2	10.3	11.3	12.4	13.5	14.5	15.6	16.7	17.8
39	7.6	8.7	9.8	10.8	11.9	13.0	14.1	15.2	16.3	17.4	18.5
40	8.0	9.1	10.2	11.3	12.4	13.5	14.6	15.7	16.8	17.9	19.0
41	8.3	9.4	10.6	11.7	12.8	13.9	15.1	16.2	17.3	18.4	19.5
42	8.8	9.9	11.0	12.2	13.3	14.4	15.6	16.7	17.8	19.0	20.1

* Chart assumes sea-level altitutes. Add 1 psi for every 2,000 ft. above sea level.

of the beer. This means we have two different factors to consider when deciding the pressure to apply to a keg. This creates a problem when the resistance of the system calls for more—or less—pressure than is needed to maintain the carbonation of the beer. To prevent conflicts, draught technicians design system resistance to match the pressure applied to the beer.

Designing For Resistance

While the individual components in any draught system have a fixed resistance value, draught system designers select from a variety of choices to create systems with a target total resistance value. For instance, a 20-ft. run of 1/4" internal diameter vinyl beer line gives a total resistance of 17 psi while 5/16" barrier tubing of the same length only generates 2 pounds of resistance.

Thus, any draught system can be designed to operate under a range of applied pressure values. Whenever possible, the operating pressure will be set to maintain the carbonation of the beer being served.

Nitro Pour Pressure

Most nitrogenated beers are poured through a special faucet that, because of its added restriction, requires the beer to be dispensed between 30 – 40 psi.

Unfortunately, in some systems this doesn't work. Consider the resistance created by long beer lines and climbs of two or more floors. Even with the lowest resistance components, the applied pressures for these systems often exceed that needed to maintain beer carbonation. These systems must use mixed gas or beer pumps to overcome the problem.

Mixed Gas

As we have seen, beer readily absorbs carbon dioxide. Any change in CO_2 pressure on a beer results in a change in the carbonation of the beer. Nitrogen is different. Beer does not absorb nitrogen gas to any significant degree. This means we can apply nitrogen pressure to beer without changing the properties of the beer. Thus, in high resistance draught systems, we use a mixture of CO_2 and nitrogen to achieve two objectives: 1) maintain proper beer carbonation and 2) overcome the system resistance to achieve a proper pour.

The exact mix of CO_2 and nitrogen depends on all the factors we have discussed: beer temperature and carbonation, system resistance and the total applied pressure that's required. Those interested in the details of these calculations can see Appendix C. While some systems use a premixed blend, other installations may require a custom mix created from separate nitrogen and CO_2 tanks by an on-site gas blender.

Dispense Goals

A balanced draught system delivers clear-pouring beer at the rate of two ounces per second. This means it takes about eight seconds to fill a pint glass and about one minute to pour one gallon of beer.

Some high-volume settings benefit from faster pours. If you try to achieve faster pours by increasing the gas pressure you will create over-carbonated beer, foam at the taps and get slower pours. If you need faster pour flows, your draught technician can alter the system resistance to achieve this result. Gas pressure, once set for a particular beer, remains constant and should never be adjusted to alter the flow rate of the beer.

Balancing Draught Systems

Having reviewed all the concepts behind draught system balance, let's examine three example systems to see how these variables are adjusted to create balanced draught systems in several different settings. ■

Example 1: Direct-Draw System

- Beer Conditions:
  - Beer temperature: 38°F
  - Beer carbonation: 2.8 volumes of CO_2 per volume of beer
  - Dispense gas: 100% CO_2
  - Gas pressure needed to maintain carbonation = 14.5 psig
- Static Pressure:
  - Vertical lift = 5 ft. (Tap 5 ft. above the center of the keg)
  - Static resistance from gravity = 5 ft. x 0.5 pounds/foot = 2.5 pounds
- Balance
  - Applied pressure of 14.5 psi must be balanced by total system resistance
  - Since static resistance equals 2.5 psi, a total of 12 pounds of system resistance will be needed: Restriction = 14.5 – 2.5 = 12 pounds
  - To achieve this: 4 ft. of 3/16" polyvinyl beer line (choker) @ 3 pounds per foot = 12 pounds)

Example 2: Long-Draw, Closed-Remote System

- Beer Conditions:
  - Beer temperature: 35°F
  - Beer carbonation: 2.6 volumes of CO_2 per volume of beer
  - Dispense gas: 65% CO_2 / 35% nitrogen blend
  - Gas pressure needed to maintain carbonation = 22 psig
- Static Pressure:
  - Vertical lift = 12 ft. (Tap 12 ft. above the center of the keg)
  - Static resistance from gravity = 12 ft. x 0.5 pounds/foot = 6.0 pounds
- Balance
  - Applied pressure of 22 psi must be balanced by total system resistance
  - Since static resistance equals 6 pounds, it has a total of 16 pounds of system resistance
  - Restriction = 22 – 6 = 16 pounds
    (120 ft. of 5/16" barrier @ 0.1 pounds per foot = 12 pounds & 1.25" choker = 4 pounds)

Example 3 of Forced-Air, 10-ft. run

- Beer Conditions:
  - Beer temperature: 33°F
  - Beer carbonation: 2.8 volumes of CO_2 per volume of beer
  - Dispense gas: 100% CO_2
  - Gas pressure needed to maintain carbonation = 10 psig
- Static Pressure:
  - Vertical fall = 10 ft. (Tap is 10 ft. below the center of the keg)
  - Static resistance from gravity = 10 ft. x -0.5 pounds/foot = -5.0 pounds
- Balance
  - Applied pressure of 10 psi must be balanced by total system resistance of 15 pounds
  - Since static resistance equals -5 pounds, the system has a total of 15 pounds of resistance
  - Restriction = 10 – (– 5) = 15 pounds

    (10 ft.of 1/4″ barrier @ 0.3 pounds per foot = 3 pounds & 4 ft. of choker = 12 pounds) = 3 pounds + 12 pounds = 15 pounds

Direct Draw Draught System Balance

At 38°F

Carbonation (Volumes CO_2)	2.3	2.4	2.5	2.6	2.7	2,8	2.9
psig Applied CO_2	9.2	10.3	11.3	12.4	13.5	14.5	15.6
3/16″ Vinyl beer line length	3′3″	3′5″	3′9″	4′2″	4′6″	4′10″	5′7″

chapter 6

preparation to pour

While many of the issues relating to draught quality concern system settings and activities that occur at the bar, some operating issues require attention behind the scenes as well. In this chapter, we'll look at keg handling and other behind-the-scenes preparations to serve beer that affect draught performance. The first sections address the important detail of keg chilling: Warm kegs cause more problems at the tap than nearly any other issue. Second, we'll cover some guidelines for linking kegs in series.

Cold Storage and Proper Chilling of Kegs before Serving

To ensure fresh flavor and ease of dispense, draught beer should remain at or slightly below 38°F throughout distribution, warehousing and delivery. Brewers and distributors use refrigerated storage for draught beer. In warm climates or long routes, they may also use insulating blankets or refrigerated delivery trucks to minimize temperature increases during shipping.

At retail, even a few degrees increase above the ideal maximum of 38°F can create pouring problems, especially excessive foaming. Ideally all draught beer delivered to retail will be stored cold until served.

Accounts that lack cold storage for their entire inventory of draught beer should allow adequate chilling time for recently refrigerated kegs in order to avoid dispense problems. In a similar vein, recently arrived kegs should be allowed adequate chilling time as they usually warm to some degree during delivery. In order to avoid dispense problems, every keg must be at or below 38°F while being served.

To help ensure that your kegs are properly chilled before serving, Chart 1 provides a guide to the time needed to properly chill a keg to 38°F from a given starting temperature. Note that even kegs that "feel cold" (e.g., 44°F) may need to chill overnight in order to ensure proper dispense.

Chart 2 shows how quickly a keg will warm up when exposed to temperatures above 38°F. From this you can see that a keg that warmed up just a little bit during delivery—from 38° to 44°F—would need to be in the cooler for a full 18 hours before reaching serving temperature.

Chart 1

Start Temp	Time to 38° F
50° F	25 hrs
48° F	23.5 hrs
46° F	21 hrs
44° F	18 hrs
40° F	7 hrs
38° F	0 hrs

Chart 2

Time	Temp
0 hrs	38° F
1 hrs	39° F
2 hrs	41° F
3 hrs	42° F
4 hrs	43° F
5 hrs	45° F
6 hrs	48° F

Linking Kegs in Series

Busy accounts may connect kegs in a series or in a chain to meet peak capacity demands. Chaining two or three kegs of the same product together allows all of the chained kegs to be emptied before beer stops flowing.

The first keg in the series will be tapped with a normal coupler. The second (and subsequent) kegs in the series require that the Thomas valve be removed from the gas side of the coupler.

Tap the first keg with the normal coupler. Instead of sending the beer line from this first coupler to the bar faucet, connect it to the CO_2 inlet on the second keg's coupler. Subsequent kegs can be attached the same way.

When pressurized and pouring, beer flows from the first keg to the second and on to the third before it travels to the faucet. Once set, this arrangement will pour the contents of all the chained kegs before it runs empty.

Kegs linked in series

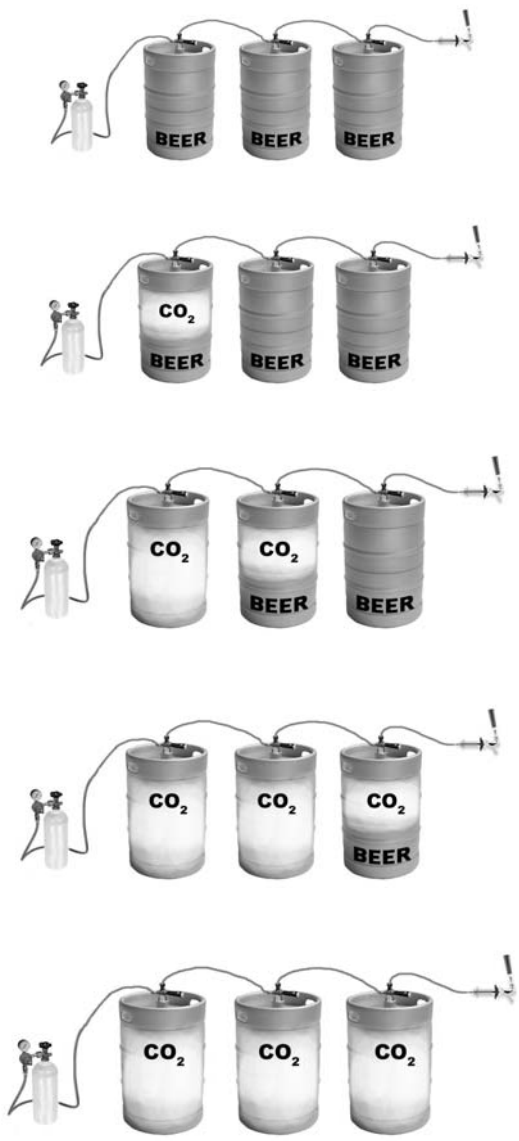

A series arrangement should only be used in accounts that will "turn," or empty kegs rapidly. The account needs to completely empty the entire series on a regular basis. Failure to empty the series completely leaves old beer in the system. The diagrams below illustrate the progressive emptying of chained kegs. ■

chapter 7

serving draught beer

Properly designed and appropriately operated, your draught system pours perfect draught beer from its faucets. But the consumer's experience can still be ruined by improper pouring, glass residue and unsanitary practices. In this chapter, we review the serving practices required to deliver high quality draught beer.

To achieve the qualities the brewer intended, beer must be served following specific conditions and techniques. Let's review some of the critical conditions necessary for proper draught dispense.

- Beer stored between 34° - 38°F
- Beer served between 38° - 44°F
- To accomplish this, the glycol cooling the beer lines in a long-draw system should be set to 27° - 32°F.
- Balanced draught settings (pressure = resistance)
- Normal flow rate of 2 ounces per second

Glassware Cleaning

A perfectly poured beer requires a properly cleaned glass. As a starting point, glassware must be free of visible soil and marks. A beer-clean glass is also free of foam-killing residues and lingering aromatics such as sanitizer.

A freshly cleaned glass should be used for every pour. We recommend that accounts never refill a used glass.

Two systems deliver effective beer glass cleaning:

1. Manual cleaning in the three-tub sink, or
2. Dedicated automatic glass washers.

Each approach requires specific techniques and a certain degree of discipline. Let's look at what's involved with each one.

Manual or Hand Cleaning in the Three-Tub Sink

1. *Clean sinks and work area prior to starting* to remove any chemicals, oils or grease from other cleaning activities

2. *Empty residual liquid from the glass to a drain.* Glasses should NOT be emptied into the cleaning water as it will dilute the cleaning solutions.

3. *Clean the glass in hot water and suitable detergent.* Detergent must not be fat- or oil-based. Detergents suitable for beer glass cleaning are available through restaurant and bar suppliers.
4. *Scrub the glass with cleaning brushes* to remove film, lipstick and other residue. Rotate the glass on the brushes to scrub all interior and exterior surfaces. Be sure to clean the bottom of the glass.
5. *Rinse glass bottom/butt down in cold water.* Water for the rinse should not be stagnant but should be continually refreshed via an overflow tube. If time permits, a double dunk is recommended and preferred.
6. *Sanitize in third sink filled with hot water and an appropriate sanitizer.* Sanitizers typically contain chlorine so check the pH and chlorine content of the sanitizing bath periodically to maintain proper conditions. Water temperature should be at a minimum 90°F. Chlorine concentration should be 100 ppm or at the required local health department concentration.

Automatic glass washing machines

1. Dedicate this machine to cleaning bar and beer glassware only. Do not subject it to food or dairy product residue.
2. Use correct detergent, sanitizer and rinse agents in properly metered amounts.
3. Check concentrations once each day using kits or follow detergent and sanitizer supplier recommendations.
4. Use water temperatures of 130° to 140°F. High temperature machines designed to operate at 180°F can be used without additional chemical sanitizers. Please check your health department for local requirements.
5. Maintain the machine to assure good water flow through the system including free flow through each nozzle and washer arm.
6. Regularly service the machine based on the manufacturer's or installer's guidelines.

Handling Clean Glasses

Keep glassware clean and odor free after washing:

1. Air-dry glassware. Drying glasses with a towel can leave lint and may transmit germs and odors.
2. Dry and store glasses in a stainless-steel wire basket to provide maximum air circulation. Similar deeply corrugated baskets or surfaces also work.
3. Do not dry or store glassware on a towel, a rubber drain pad or other smooth surface, as they can transfer odors to the glass and slow the drying process.
4. Store glassware in an area free of odors, smoke, grease or dust.

5. Store chilled glasses in a separate refrigerator away from food products such as meat, fish, cheese or onions as they can impart an odor to the glasses.
6. Store beer glasses dry in a chiller. Never use a freezer. Chill glasses at 36° – 40°F.

Testing for "Beer-Clean" Glass

Beer poured to a beer clean glass forms a proper head and creates residual lacing as the beer is consumed. After cleaning, you can test your glasses for beer clean status using three different techniques: sheeting, the salt test and lacing. Let's review each technique.

1. **Sheeting Test:** Dip the glass in water. If the glass is clean, water evenly coats the glass when lifted out of the water. If the glass still has an invisible film, water will break up into droplets on the inside surface.
2. **Salt Test:** Salt sprinkled on the interior of a wet glass will adhere evenly to the clean surface, but will not adhere to the parts that still contain a greasy film. Poorly cleaned glasses show an uneven distribution of salt.
3. **Lacing Test:** Fill the glass with beer. If the glass is clean, foam will adhere to the inside of the glass in parallel rings after each sip, forming a lacing pattern. If not properly cleaned, foam will adhere in a random pattern, or may not adhere at all.

Glassware Temperature

- Serving between 38° to 44°F delivers the best taste experience for most beer styles. Domestic lager beer can be enjoyed at 38° to 40°F if served in a chilled glass. Beer served at near-frozen temperatures retains more CO_2 gas (resulting in a more filling experience for the consumer) and blinds the taste experience (taste buds are "numbed," resulting in a bland taste experience) in comparison with beer served at recommended temperatures.
- Room temperature glasses are preferred for craft beer but may cause foaming on highly carbonated beer.
- Chilled glasses are preferred for domestic lager beer, but they should be DRY before chilling. Wet glassware should not be placed in a freezer or cooler as it may create a sheet of ice inside the glass.
- Frozen glasses will create foaming due to a sheet of ice being formed when the beer is introduced to the glass. Extremely cold glass surfaces will cause beer to foam due to a rapid release of CO_2 from the product.
- Water mist devices may be used to pre-wet and chill the glass interior prior to dispense. Glass interior should be mostly free of excess water before pouring.

Sheeting

Salt

Lacing

Pouring Draught Beer

Proper serving of draught beer is intended to have a "controlled" release of carbonation to give a better tasting and sensory experience. The evolution of CO_2 gas during pouring builds the foam head and releases desirable flavors and aromas.

Technique

1. Hold glass at 45° angle, open faucet fully.
2. Gradually tilt glass upright once beer has reached about the halfway point in the glass.
3. Pour beer straight down into the glass, working the glass to form a one inch collar of foam ("head"). This is for visual appeal as well as carbonation release.
4. Close faucet quickly to avoid wasteful overflow.

Pouring Hygiene

- In no instance should a faucet nozzle touch the inside of the glass
  - Nozzles can potentially transfer germs from one glass to another.
- In no instance should the faucet nozzle become immersed in the consumer's beer.
  - Nozzles dipped in beer become a breeding ground for microorganisms.
- Importance of one-inch foam collar:
  - While retailers struggle with customers who demand their beer "filled to the rim," brewers prefer beer poured with about a one-inch collar of foam ("head").
- A one-inch head maximizes retailer profit, as foam is 25% beer. Filling glass to the rim is really overpouring.
- A proper head on a draught beer delivers the total sensory experience, including the following sensory benefits:
- Visual appeal of a good pour
- Aromatic volatiles in beer released
- Palate-cleansing effect of carbonation enhanced
- Textural and sensorial qualities of beer better presented to consumer

Free-Flow Pouring

- Beer pours best from a fully open faucet.
- To control the faucet during operation, hold the handle firmly at the base.
- Partially open faucets cause inefficiency and poor quality, namely:
  - Turbulent flow
  - Excessive foaming
  - Waste (inefficiency)

For notes on proper dispense hygiene when using a cask ale "beer engine," see Appendix D. ■

chapter 8

system maintenance and cleaning

In addition to alcohol and carbon dioxide, finished beer contains proteins, carbohydrates and hundreds of other organic compounds. Yeast and bacteria routinely enter draught systems where they feed on beer and attach to draught lines. Minerals also precipitate from beer leaving deposits in lines and fixtures.

Within weeks of installing a brand new draught system, deposits begin to build up on the beer contact surfaces. Without proper cleaning, these deposits soon affect beer flavor and undermine the system's ability to pour quality beer.

When undertaken using proper solutions and procedures, line cleaning prevents the buildup of organic material and mineral deposits while eliminating flavor-changing microbes. Thus, a well-designed and diligently executed maintenance plan ensures trouble-free draught system operation and fresh, flavorful beer.

Cleaning Standards

Many states require regular draught line cleaning, but all too often the methods used fall short of what is needed to actually maintain draught quality. In preparing this manual, our committee polled all sectors of the beer industry and called on our own many decades of cumulative experience to determine the necessary and sufficient conditions for proper draught maintenance. In this chapter, we recommend and detail the practices that have proven effective in sustaining draught quality.

Please note that all parts of the recommendations must be implemented. The proper cleaning solution strength won't be effective if the temperature is too cool or there's insufficient contact time with the lines. The lines themselves will remain vulnerable to rapid decline if faucets and couplers aren't hand-cleaned following the recommended procedures.

As a retailer, you may or may not clean your own draught lines, but you have a vested interest in making sure the cleaning is done properly. Clean lines make for quality draught beer that looks good, tastes great and pours without waste. Take the time to review these guidelines and monitor your draught cleaners—no matter who they are—to ensure that your system receives the service it needs to serve you and your customers well.

Summary Cleaning Recommendations

These guidelines reflect the key actions needed to maintain draught systems and pour trouble-free high-quality beer. Before performing these actions, please read the detailed recommendations found elsewhere in this chapter as they contain many details important to effective and successful cleaning.

Perform draught line cleaning every two weeks (14 days), as follows:

- Push beer from lines with cold water.
- Clean lines with caustic solution at 2% or greater concentration for newer, well-maintained lines or 3% concentration for older or problematic lines. Maintain a solution temperature of 80° - 125°F.
- Caustic solution should be circulated through the lines for 15 minutes at a velocity of 2 gallons per minute for electric pump cleaning or left to stand in the lines for no less than 20 minutes for static cleaning.
- Disassemble and hand clean faucets; hand clean couplers.
- After cleaning, flush lines with cold water until pH matches that of tap water and no visible debris is being carried from the lines.

Quarterly (every three months):

- Disassemble and hand clean all FOB-stop devices (a.k.a. beer savers, foam detectors)
- Disassemble and hand clean all couplers.
- Perform acid cleaning of draught lines as follows*:
  - Push beer or caustic cleaner from lines with cold water.
  - Clean lines with an acid line cleaner mixed to manufacturer's guidelines. Maintain a solution temperature of 80° - 125°F.
  - Circulate the acid solution through the lines for 15 minutes at a velocity of 2 gallons per minute for electric pump cleaning or let stand in the lines for no less than 20 minutes for static cleaning.
  - After acid cleaning, flush lines with cold water until pH matches that of tap water and no visible debris is being carried from the lines.

Common Issues

Later in this chapter, we cover the details of cleaning solutions and procedures, but first let's review some related issues. We'll start with an important look at safety, then briefly discuss design considerations and wrap up with the long-term maintenance issue of line replacement.

Cleaning Safety

Line cleaning involves working with hazardous chemi-

cals. The following precautions should be taken:

- Cleaning personnel should be well trained in handling hazardous chemicals.
- Personal protection equipment including rubber gloves and eye protection should be used whenever handling line cleaning chemicals.
- Cleaning solution suppliers offer Material Safety Data Sheets (MSDS) on their products. Cleaning personnel should have these sheets and follow their procedures while handling line cleaning chemicals.
- When diluting chemical concentrate, **always add chemical to water** and never add water to the chemical. Adding water to concentrated caustic chemical can cause a rapid increase in temperature, possible leading to violent and dangerous spattering or eruption of the chemical.

System Design and Cleanliness

Draught system designs should always strive for the shortest possible draw length to help reduce operating challenges and line cleaning costs. Foaming beer and other pouring problems waste beer in greater volumes as draw length increases. Line cleaning wastes beer equal to the volume of the beer lines themselves. Longer runs also place greater burdens on mechanical components, increasing repair and replacement costs.

Large venues like stadiums, arenas and casinos often combine very long draught runs with long periods of system inactivity that further complicate cleaning and maintenance. Additional maintenance costs eventually outweigh any perceived benefits of a longer system.

Other Line Cleaning Methods

Devices that purport to electrically or sonically clean draught lines are not a suitable substitute for chemical line cleaning. Although some sonic cleaners may inhibit bacteria and yeast growth, they have little or no cleaning effect on draught hardware and fittings.

System Maintenance: Line Replacement

- All vinyl jumpers and vinyl direct draw lines should be replaced every year.
- All long-draw trunk line should be replaced in the following instances:
    - When the system is ten years or older.
    - When flavor changes are imparted in a beer's draught line from an adjacent draught line.
    - When any line chronically induces flavor changes in beer.
- Draught lines may need to be replaced after pouring root beer, fruit-flavored beers, margaritas or ciders. Such beverages may permanently contaminate a draught line and possibly adjacent draught lines in the same bundle. Such contamination precludes future use of that draught line for beer.
- In the case where a coupler's gas back flow valve (Thomas valve) is or ever has been missing, the gas line may well have been compromised and should be replaced.

Detailed Recommendations

The following sections detail the committee's recommendations on draught line cleaning. We begin with the basic issue of tasks and their frequency then move into the more involved questions of cleaning solutions and procedures. The final pages of this chapter detail the procedures for electric pump and pressure pot cleaning.

Cleaning Frequency and Tasks

- Every two weeks (14 days)
    - Draught lines should be cleaned with a caustic line cleaning chemical following the procedures outlined in this chapter.
    - All faucets should be completely disassembled and cleaned
    - All keg couplers or tapping devices should be scrubbed clean
- Quarterly (every three months)

- Draught lines should be de-stoned quarterly with an acid line cleaning chemical or a strong chelator in addition to the regular caustic cleaning. (The committee is working with brewing industry researchers to complete further studies on line-cleaning chemistry, including additives such as EDTA.)
- All FOB-stop devices (a.k.a. beer savers, foam detectors) should be completely disassembled and hand detailed (cleaned).
- All couplers should be completely disassembled and detailed.

Cleaning Solutions and Their Usage

Caustic-Based Cleaning Chemistry

- Caustic chemicals remove organic material from the interior of the draught line, hardware and fittings. The removal of this buildup prevents growth of beer-spoiling bacteria such as lactobacillus, pediococcus and pectinatus.
- Use a caustic cleaner specifically designed for draught line cleaning that uses either sodium hydroxide, potassium hydroxide or a combination of both.
- Some caustic line cleaning solutions add EDTA or another chelating agent to help remove calcium oxalate (beer stone) from draught lines.
- Never use solutions that contain any amount of chlorine for line cleaning.
- Based on brewery testing, we recommend that caustic line cleaning solution be mixed to a solution strength of at least 2%. A 3% caustic solution is more appropriate for lines more than 7 years old or for any line that imparts a flavor change to the beer served from it.
- Mix caustic solution with water warmed to a temperature between 80° - 125°F.
- Caustic cleaner must remain in contact with the draught line for at least:
    - 15 minutes when solution is being re-circulated, and
    - 20 minutes for static, or pressure pot cleaning.

Acid Chemical

- Acid line cleaner removes inorganic materials such as calcium oxalate (beer stone) and calcium carbonate (water stone) from the interior of the draught line, hardware and fittings.
- EDTA or another chelating agent added to the regular caustic cleaning solution may reduce calcium oxalate buildup in draught lines and may decrease the need to clean regularly with an acid-based cleaner.
- Acid-based line cleaners suitable for draught line cleaning contain solutions of phosphoric acid.
- Some acid-based cleaners use acids that can harm your draught equipment:
    - Hydrochloric acid corrodes to stainless steel and should no be used for cleaning draught lines.
    - Nitric acid is not compatible with nylon products, including some commonly used draught line tubing, and should not be used for cleaning draught lines.
- Mix acid line cleaner to the solution strength recommended by the manufacturer.
- Mix acid line cleaner with water warmed to a temperature between 80° -125°F.
- Acid solution must remain in contact with the draught line for at least:
    - 15 minutes when solution is being re-circulated, or
    - 20 minutes for static, or pressure pot cleaning.

Water Rinsing

- Always flush draught lines with fresh water before pumping chemical into the line.
- Always flush draught lines with water **after** using

any chemical solution (caustic and acid).

- Continue water flushing until:
  - No solid matter appears in the rinse water.
  - No chemical residue remains in the draught line.
- Confirm chemical removal by testing the solution with pH strips or a pH meter.
  - Before beginning the rinse, draw a reference sample of tap water and test its pH.
  - During rinsing test the rinse water exiting the draught system periodically.
  - When the pH of the rinse water matches that of the tap water, the chemical is fully flushed out.
- **Chemical solution must never be flushed from draught lines with beer.**

Cleaning Methods and Procedures

To be effective, cleaning solutions need to reach every inch of beer line and every nook and cranny of the connectors and hardware. You can hand clean some items like couplers and faucets, but most of the system must be reached by fluid flowing through the beer lines. The industry currently uses two cleaning procedures for beer lines: re-circulation by electric pump and static or pressure pot cleaning.

Electric pump re-circulation improves cleaning efficiency by constantly moving the cleaning solution through the beer lines through the cleaning period. You can use this method on all draught systems and it is the preferred approach for nearly all long-draw systems.

Key considerations in setting up an electric pump cleaning:

- The chemical flow should be the reverse of the beer flow wherever possible.
- Configure cleaning loops to achieve a flow rate of 2 gallons per minute, or approximately twice the flow rate for beer.
  - The flow rate can be controlled by:
    - Minimizing the number of draught lines cleaned at one time.
    - Increasing the size of the pump used.
  - Assess the flow rate by filling a standard 60 oz. beer pitcher with the cleaning solution outlet. At 2 gallons per minute it fills in 15 seconds or less.
- The pressure on the draught lines during re-circulation should never exceed 60 psi.
- Under these conditions, chemical solution should re-circulate for a minimum of 15 minutes.

Static or pressure pot cleaning offers an alternative method to clean runs of less than 15 ft. This requires 20 minutes of contact time with the cleaning solutions to make up for the lack of circulation.

The remainder of this chapter covers use of these cleaning methods, starting with setup and proceeding to the detailed steps for each procedure.

Before You Start

Regardless of your cleaning methods, some system designs require specific attention before you begin cleaning. Here's a list of items to check and consider.

- On glycol-chilled systems, the glycol chiller should be shut off where possible to maintain solution temperature during cleaning. Failure to do so compromises cleaning effectiveness and may cause cleaning solution or rinse water to freeze in the lines.
- In pneumatic beer pump systems:
  - Turn off the gas supply to the pumps.
  - On the line(s) to be backflushed, set the pump valve orientation to "Backflush." Pumps that lack a "backflush" option may be damaged by cleaning and should be cleaned using a different method.
- All legs in 'split lines' (lines that are 'teed' in the cooler or under the bar to feed more than one

faucet from a single keg) must be cleaned as completely separate draught lines.

Re-circulation-Electric Pump Cleaning Step-By-Step Procedure:

1. Begin by connecting two keg couplers with a cleaning coupler. (Do not engage the couplers.).
    - If cleaning four lines, connect a second set of lines with another cleaning coupler, creating a second 'Loop.' Cleaning more than four lines at once is not recommended, as it will be difficult to achieve the proper chemical flow rate.
    - To clean the lines and couplers used for series kegs, connect the couplers attached to the gas lines and place series caps with check ball lifters on all other couplers.

2. On the corresponding lines at the bar, remove both faucets from their shanks.
    - When cleaning two lines, attach the 'Out' hose from the pump to one shank and a drain hose or spare faucet to the other shank.
    - When cleaning four lines, attach the 'Out' . hose from the pump to one shank, connect the other shank in the loop to a shank in the second loop with a 'jumper' hose and attach a drain hose or spare faucet to the remaining shank in the second loop.
    - When cleaning four lines, ensure that the drain hose and 'Out' hose from the pump are not on the same coupler "loop."
3. Fill a bucket ("Water Bucket") with warm water and place the 'In' hose into the water.
    - Turn pump on and flush beer into a second bucket ("Chemical Bucket") until the line runs clear with water.
    - Shut pump off and discard the flushed beer.
4. Turn pump back on allowing warm water to run into the clean Chemical Bucket.
    - Measure the flow rate of the liquid by filling a beer pitcher or some container with a known volume. Flow rate should be a minimum of 2 gallons (256 oz.) per minute
      o If cleaning is configured for four lines and flow rate is too slow, remove the jumpers and clean each pair of lines separately
    - Allow bucket to fill with just enough water to cover the inlet hose of the pump.
    - Add the appropriate amount of line cleaning chemical to achieve 2-3% caustic in solution based on age and condition of beer line.
5. Remove the 'In' hose from the Water Bucket and place into the Chemical Bucket.
    - There should now be a closed loop
    - Water should be draining into the same bucket that the pump is pulling from.
6. Allow solution to re-circulate for a minimum of 15 minutes.

- While waiting, clean your faucets.
- Fill Water Bucket with cold water.

7. Begin your rinse by removing the 'In' hose from Chemical Bucket and placing it into the Water Bucket (filled with cold water).
8. Continue pumping cold water from the Water Bucket into the Chemical Bucket (shutting off pump and dumping Chemical Bucket as needed) until all chemical has been pushed out of the draught lines and there is no solid matter in the rinse water.
9. Finish up by shutting off the pump, detaching the cleaning coupler, and replacing the faucets.

When Finished

- Be sure to return all system components to their original functional settings; i.e., turn glycol pumps back on, turn on gas supply to pneumatic beer pumps, etc.

Static – Pressure Pot Step-By-Step Procedure:

1. Fill the cleaning canister with clean water.
2. Untap the keg and tap the cleaning canister. Engage the tapping device.
   - When cleaning series kegs, connect the tapping devices attached to the gas lines and place series caps on all other tapping devices.
3. Open faucet until the beer is flushed out and clear water is pouring.
4. Untap the canister and fill the canister with cleaning chemical mixed to the appropriate strength to achieve 2-3% caustic in solution based on age and condition of beer line.
5. Tap the canister again.
6. Open the faucet until the water is flushed out and chemical solution is pouring from the faucet.
7. Shut off the faucet and untap the canister.
   - If the system is driven with pneumatic beer pumps, shut off the gas supply to the pumps to turn them off.
8. Remove the faucet and clean.
9. Replace faucet and retap the canister.
10. Pull through solution again to replenish the contents of the draught line. Chemical should be replenished at least twice during the cleaning process.
11. Allow to soak a total of 20 minutes.
12. Untap canister, empty and rinse.
13. Fill the canister with clean, cold water and retap.
14. Open the faucet and rinse until all chemical has been flushed out and there is no solid matter in the rinse water.
15. Finish by untapping the canister, retapping the keg and pouring beer until it dispenses clear.

When Finished

- Be sure to return all system components to their original functional settings; i.e., turn back on glycol pumps, turn on gas supply to pneumatic beer pumps, etc. ■

appendix a

ISBT guidelines for beverage grade carbon dioxide

Purity	99.9% min*
Moisture	20 ppm max
Oxygen	30 ppm max
Carbon monoxide	10 ppm max
Ammonia	2.5 ppm max
Nitric oxide/nitrogen dioxide	2.5 ppm max each
Nonvolatile residue	10 ppm (wt) max
Nonvolatile organic residue	5 ppm (wt) max
Phosphine	0.3 ppm max
Total volatile hydrocarbons	50 ppm max
Acetaldehyde	0.2 ppm max
Aromatic hydrocarbon	20 ppb max
Total sulfur content	0.1 ppm max
Sulfur dioxide	1 ppm max
Odor of Solid CO_2	No foreign odor
Appearance in water	No color or turbidity
Odor and taste in water	No foreign taste or odor

All specification based on volume (v/v) unless otherwise noted.

appendix b

CO_2 gauge pressure reference chart

Table 1. Determination of CO_2 application pressure given volumes of CO_2 and temperature

Vol. CO_2	2.1	2.2	2.3	2.4	2.5	2.6	2.7	2.8	2.9	3.0	3.1
Temp. °F	PSI	PSI	PSI	PSI	PSI	PSI	PSI	PSI	PSI	PSI	PSI
33	5.0	6.0	6.9	7.9	8.8	9.8	10.7	11.7	12.6	13.6	14.5
34	5.2	6.2	7.2	8.1	9.1	10.1	11.1	12.0	13.0	14.0	15.0
35	5.6	6.6	7.6	8.6	9.7	10.7	11.7	12.7	13.7	14.8	15.8
36	6.1	7.1	8.2	9.2	10.2	11.3	12.3	13.4	14.4	15.5	16.5
37	6.6	7.6	8.7	9.8	10.8	11.9	12.9	14.0	15.1	16.1	17.2
38	7.0	8.1	9.2	10.3	11.3	12.4	13.5	14.5	15.6	16.7	17.8
39	7.6	8.7	9.8	10.8	11.9	13.0	14.1	15.2	16.3	17.4	18.5
40	8.0	9.1	10.2	11.3	12.4	13.5	14.6	15.7	16.8	17.9	19.0
41	8.3	9.4	10.6	11.7	12.8	13.9	15.1	16.2	17.3	18.4	19.5
42	8.8	9.9	11.0	12.2	13.3	14.4	15.6	16.7	17.8	19.0	20.1

* Chart assumes sea-level altitudes. Add 1 psi for every 2,000 ft. above sea level.

* Chart Reference

- Based on Data from "Methods of Analysis", American Society of Brewing Chemists, 5th Edition – 1949 (attached)

- Correlation of pressure versus volumes of CO_2 at a given temperature are linear
- y = mx + b was used to determine the pressure at a known temperature and CO_2 volume
- Example: at 33°F and 2.6 volumes of CO_2 the line slope is 9.54 and the y-intercept is -15.034, thus y (CO_2 pressure) = m (slope) x (CO_2 volumes) + b (y – intercept)

y = 9.54 * 2.6 volumes + (-15.034)

y = 9.8 psi CO_2 pressure

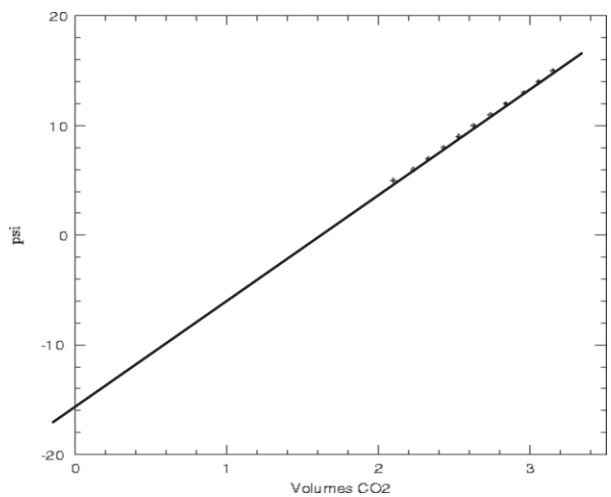

Figuring ideal gauge pressure of straight CO_2 when carbonation level is not known:

1. Set the regulator pressure to 5 psi.
2. Tap a fresh keg. Make sure the keg has been in the cooler long enough to be at the cooler temperature.
3. Pour a small amount of beer through the faucet.
4. Observe the beer in the draught line directly above the keg coupler (with a flashlight if necessary), inspecting for bubbles rising up from the beer in the keg.
5. If bubbles are present, raise the regulator pressure 1 psi.
6. Repeat steps 3 - 5 until no bubbles are present.

This is the lowest pressure at which the gas in the beer is not escaping. This is your ideal gauge pressure.

appendix c

figuring gauge pressure or blend percentage of CO_2 / N blend

* Mathematical analysis

$$\mathbf{a = \left(\frac{b + 14.7}{c}\right) - 14.7}$$

$$a + 14.7 = \left(\frac{b + 14.7}{c}\right)$$

$$(a + 14.7) * c = b + 14.7$$

$$\mathbf{((a + 14.7) * c) - 14.7 = b}$$

$$(a + 14.7) * c = b + 14.7$$

$$\mathbf{c = \frac{b + 14.7}{a + 14.7}}$$

a = psi of the gas

b = ideal gauge pressure of straight

c = % of CO_2 in the gas

- To figure the correct keg pressure for a custom CO_2 / N blend, use the following procedure:
  - You must first know the average carbonation level, in volumes, of the beers you are balancing.
  - You must know the CO_2 percentage in the blend to be used.
    1. Using the average carbonation level, figure the ideal gauge pressure of straight CO_2 from the chart in the CO_2 – Figuring the correct pressure section.
    2. Use the following equation, where
       a. a = psi of the gas blend
       b. b = ideal gauge pressure with straight CO_2
       c. c = % of CO_2 in the gas blend (as a whole number; i.e., 60% CO_2 = 0.6)

$$\mathbf{a = \left(\frac{b + 14.7}{c}\right) - 14.7}$$

Examples:

$$a = \left(\frac{b + 14.7}{c}\right) - 14.7$$

$$a = \left(\frac{12 + 14.7}{0.7}\right) - 14.7$$

$$a = \left(\frac{26.7}{0.7}\right) - 14.7$$

$$a = (38.1) - 14.7$$

$$a = (23.4)$$

a = psi of the gas

b = **12** straight

c = **70%** in the gas

- To figure the correct blend for a custom CO_2 / N blend, use the following procedure:
  - You must first know the average carbonation level, in volumes, of the beers you are balancing.
  - You must know the operating pressure at which the kegs will be poured.
    1. Using the average carbonation level, figure the ideal gauge pressure of straight CO_2 from the chart in the CO_2 – Figuring the correct pressure section.
    2. Use the following equation, where

       a = psi of the gas blend

       b = ideal gauge pressure with straight CO_2

       c = % of CO_2 in the gas blend (as a whole number; i.e., 60% CO_2 = 0.6)

$$c = \frac{b + 14.7}{a + 14.7}$$

Examples:

$$c = \frac{b + 14.7}{a + 14.7}$$

$$c = \frac{12 + 14.7}{22 + 14.7}$$

$$c = \frac{26.7}{36.7}$$

$$c = 0.728 = 72.8\%$$

a = psi of the gas

b = **12** straight

c = **70%** in the gas

appendix d

notes on serving cask ale

Beer Engines

Beer engines dispense cask beer. Pulling the handle actuates a piston or chamber of the engine and pumping beer from the cask to the customer's glass. Beer engines can be clamp-on or built into a bar. Some breweries that make cask ales will require a sparkler (perforated disk) that attaches to the end of pouring spout.

Beer Engine

Pouring Hygiene for Cask Ale

Pouring cask ale from a swan neck beer engine faucet is the only instance when the faucet should come into contact with the inside of a beer glass. Due to the unique nature of this beer dispense system, a list of guidelines must be followed to ensure proper sanitation.

1. Always use a clean glass when pulling beer from the cask pump. This is the case when pouring any draught beer; however, even more important with cask ale, due to the potential to transfer germs from one glass to another.
2. After the beer is pumped into the clean glass, wipe the entire faucet with a clean towel wetted with fresh water. It is important not to use chemicals as those chemicals may end up in the subsequent beer. It is equally important not to use a rag previously used for wiping bar surfaces or other cleaned areas as those germs may contaminate the next beer as well. Keeping the cask faucet clean and dry is the best defense from potentially contaminating future glasses of cask ale.
3. The closing bartender should do one final clean of the cask faucet, the drip tray and the surface of the entire cask pump when the bar closes. This cleaning should be done with restaurant/bar sanitizer approved by your local and state health code. If the cask faucet uses a sparkler, the sparkler should be removed and soaked overnight

in the same sanitizer at a soaking concentration listed by the manufacturer.

4. The opening bartender should wipe the cask faucet with a clean towel wetted with fresh water before the first cask beer is pulled to ensure any residual sanitizer from the previous night is removed. If the cask pump is fitted with a sparkler, thoroughly rinse the sparkler under fresh water before attaching it to the cask faucet.

- Importance of one-inch collar of foam: Well prepared cask ale will easily allow for one-inch of head or more if a sparkler is fitted on the end of the faucet. Without the sparkler device, a full one-inch collar of foam may be difficult to achieve. The bar or restaurant manager should consult the brewer to discuss how their particular beer is intended to be served.
- The purpose of a proper head on any cask ale is the same as a draught beer; the head helps to deliver the total sensory experience, including the following sensory benefits:
    - Visual appeal of a good pour
    - Aromatic volatiles in a beer are released
    - Palate-cleansing effect of carbonation is enhanced
    - Textural and sensorial qualities of beer are better presented to consumer ■

draught beer glossary

Acid cleaner – Although several blends of acid cleaners are recommended to assist in beer stone and water stone removal, some acids react with system components. Phosphoric acid-based blends are the only ones safe on all materials.

Balance – Ensuring that the applied pressure matches the system requirements so that the beer dispenses at the optimum rate of about 2 ounces per second or 1 gallon per minute while maintaining brewery-specified carbonation level.

Barrier Tubing – Plastic tubing with a lining of nylon or PET that provides a gas barrier to better protect the beer from oxidation.

Beer Pumps – A mechanical pump that is generally driven by compressed air or CO_2 that can move beer great distances without changing the dissolved gases.

Beer Stone- Calcium Oxalate – A mineral deposit that forms slowly on a surface from beer and is very difficult to remove.

Caustic or Caustic Soda or NaOH – Sodium hydroxide – a high pH chemical commonly used in blending draught line cleaning solutions that will react with organic deposits in the draught beer line. Very effective, but also very dangerous. Commonly used in oven cleaners.

Caustic Potash or KOH or Potassium Hydroxide - Similar to sodium hydroxide, but offers slightly different chemical properties in a blended cleaning solution.

CO_2 – Carbon Dioxide, a natural product of fermentation and the gas used to push beer in draught beer systems. CO_2 leaks in the gas system are dangerous because high concentrations of CO_2 will displace air and cause asphyxiation.

CO_2 Volumes – The concentration of CO_2 in beer expressed as volumes of gas at standard conditions per volume of beer.

Coil Box – A cooling system to bring beer to serving temperature at the point of dispense consisting of a coil of stainless steel immersed in ice water. Often used at picnics or events where normal keg temperature cannot be maintained.

Cold Plate – A cooling system to bring beer to serving temperature at the point of dispense consisting of a stainless steel coil embedded in an aluminum plate in contact with the ice. Cooling is the result of melting the ice rather than just heat transfer, so water must be drained away from the cold plate. Often used at picnics or events where normal keg temperature cannot be maintained.

Coupler – The connector to the keg.

Dewar – An insulated, pressurized container for liquefied gas such as CO_2.

Direct Draw – A draught beer system that has a short jumper connection from the keg to the faucet.

EDTA – Ethylene Diamine Tetracetic Acid – A cleaning solution additive that can dissolve calcium mineral deposits in draught beer systems.

Faucet – The dispensing end of the draught beer system that controls the flow of beer.

Flash Chillers – Mechanical cooling systems to bring beer to serving temperature at the point of dispense. Often used with flash-pasteurized kegs that can be stored at room temperature.

FOB – Foam on Beer detector. A device that stops the flow of beer when the keg is empty before the beer line is filled with foam.

Glycol or Propylene Glycol – A food-grade refrigerant that is re-circulated through insulated tubing bundles to maintain beer temperature.

ISBT – International Society of Beverage Technologists who created a quality standard for CO_2 for beverage use.

Jockey Box – A cooler with a coiling coil or cold plate and faucets to chill the beer at the point of dispense.

John Guest Fittings – A specific brand of quick connect for stiff plastic tubing.

Jumper Tubing – The flexible piece of vinyl tubing that is used between the keg and draught beer system that should be replaced annually.

Lift – The change in height from the keg to the faucet that is a component of system balance.

Line – Tubing that makes up the draught beer flow path.

Long Draw – A draught beer system over 50 feet long that uses barrier tubing in a refrigerated bundle that typically requires a mixed gas to avoid over-carbonation.

Nitrogen Generator – A system designed to separate nitrogen from compressed air, typically by membrane. Nitrogen used for beer dispense in a mixed gas application must be >99% pure.

NSF – National Sanitation Foundation: An organization that certifies food service equipment for performance and cleanability.

Party Pump or Picnic Pump - A hand pump that uses compressed air to dispense beer. This type of pump should only be used when the entire keg is going to be dispensed at one time, because oxygen will damage the beer.

PE – Polyethylene – Stiffer tubing used in older refrigerated bundles (this oxygen-permeable material contributed to oxidation of the beer remaining in the lines and is now only recommended for use as glycol tubing).

Pot – Pressure Pot, Cleaning Pot – A canister for cleaning solution or rinse water that is connected to a pressure source pushing the solution through the lines like beer. Does not give sufficient velocity for (mechanical) cleaning, so this should only be used on short lines with longer chemical exposure.

PSI – Pounds per Square Inch. A unit of measure of gas pressure.

PSIA – Pounds per Square Inch, Absolute. A measure of gas pressure against a perfect vacuum so it includes the atmospheric pressure of 14.7 psi at sea level.

PSIG – Pounds per Square Inch, Gauge. A measure of gas pressure against the atmospheric pressure, typically seen on gas regulator gauges. Since atmospheric pressure varies with altitude, the gauge pressure must be adjusted with altitude.

PVC – Polyvinyl Chloride – Flexible jumper tubing.

Regulator – A gas control valve that delivers a set gas pressure regardless of tank pressure. There may be a primary regulator on the gas source and a secondary regulator at the gas connection for each keg.

Resistance (or System/Component/Line Resistance) – A measure of the pressure drop across a component or over a length of tubing at the optimum beer flow rate.

Sanitizer – An EPA-registered product that is designed to kill microorganisms.

Sankey – This term refers to the modern style of keg coupler. It is available in several versions to fit specific styles of keg valves produced in Europe and the USA.

Sequestrants – Chemicals that hold metal ions in solution and prevent mineral deposits.

Series Kegs – Hooking multiple kegs together so the beer from the first flows through the second and then into the next so that the kegs can be changed less frequently.

Shank – The connecting piece that goes through the cold box wall or tower and connects the tubing and tailpiece to the tap. It also can help provide system pressure reduction.

Short Draw – A draught system under 50 ft. long that can be run on straight CO_2 or mixed gas, and can use air-cooled or refrigerated lines.

Surfactants – Compounds used in blended draught beer line cleaners that lower surface tension to enhance surface wetting, break the bond between deposits and the tubing surface and suspend soils in cleaning solution so they can be removed.

Tail Pieces – The connectors that allow a piece of tubing to be attached to a piece of equipment.

Tap – The connector from the draught system to the keg (more properly referred to as a coupler).

Tavern Head – The connector from the draught system to the keg (more properly referred to as a coupler).

Tower – The mount on the bar that holds the faucets and is cooled to maintain beer temperature up to the point of dispense.

Water Conditioners – A component of a blended cleaner that is intended to carry away soils.

Water Stone – Calcium Carbonate – A mineral deposit that forms from water that can be removed with acid. ■

www.draughtquality.org

Brewers Association
736 Pearl Street
Boulder, CO 80302
303.447.0816 • 888.822.6273
www.draughtquality.org
info@brewersassociation.org

Brewers Association
www.beertown.org