No. 7600036

THE UNITED STATES OF AMERICA

TO ALL TO WHOM THESE PRESENTS SHALL COME:

Wisconsin Agricultural Experiment Station

Whereas, THERE HAS BEEN PRESENTED TO THE

Secretary of Agriculture

AN APPLICATION REQUESTING A CERTIFICATE OF PROTECTION FOR AN ALLEGED NOVEL VARIETY OF SEXUALLY REPRODUCED PLANT, THE NAME AND DESCRIPTION OF WHICH ARE CONTAINED IN THE APPLICATION AND EXHIBITS, A COPY OF WHICH IS HEREUNTO ANNEXED AND MADE A PART HEREOF, AND THE VARIOUS REQUIREMENTS OF LAW IN SUCH CASES MADE AND PROVIDED HAVE BEEN COMPLIED WITH, AND THE TITLE THERETO IS, FROM THE RECORDS OF THE PLANT VARIETY PROTECTION OFFICE, IN THE APPLICANT(S) INDICATED IN THE SAID COPY, AND WHEREAS, UPON DUE EXAMINATION MADE, THE SAID APPLICANT(S) IS (ARE) ADJUDGED TO BE ENTITLED TO A CERTIFICATE OF PLANT VARIETY PROTECTION UNDER THE LAW.

NOW, THEREFORE, THIS CERTIFICATE OF PLANT VARIETY PROTECTION IS TO GRANT UNTO THE SAID APPLICANT(S) AND THE SUCCESSORS, HEIRS OR ASSIGNS OF THE SAID APPLICANT(S) FOR THE TERM OF seventeen YEARS FROM THE DATE OF THIS GRANT, SUBJECT TO THE PAYMENT OF THE REQUIRED FEES AND PERIODIC REPLENISHMENT OF VIABLE BASIC SEED OF THE VARIETY IN A PUBLIC REPOSITORY AS PROVIDED BY LAW, THE RIGHT TO EXCLUDE OTHERS FROM SELLING THE VARIETY, OR OFFERING IT FOR SALE, OR REPRODUCING IT, IMPORTING IT, OR EXPORTING IT, OR USING IT IN PRODUCING A HYBRID OR DIFFERENT IETY THEREFROM, TO THE EXTENT PROVIDED BY THE PLANT VARIETY PROTECTION ACT. E UNITED STATES SEED OF THIS VARIETY (1) SHALL BE SOLD BY VARIETY NAME ONLY AS S OF CERTIFIED SEED AND (2) SHALL CONFORM TO THE NUMBER OF GENERATIONS SP BY THE OWNER OF THE RIGHTS. (84 STAT. 1542, AS AMENDED, 7 U.S.C. 2321 ET SEQ.)

OAT

'Wright'

In Testimony Whereof, *I have hereunto set my hand and caused the seal of the* Plant Variety Protection Office *to be affixed at the City of* Washington *this* 27th *day of* October *in the year of our Lord one thousand nine hundred and* seventy-six

Attest:

Commissioner
Plant Variety Protection Office
Grain Division
Agricultural Marketing Service

ting Secretary of Agriculture

 7600036

8. RACHIS:

[2] 1 = RECURVED (Yancey) 2 = ERECT (Walken)

[1] SECOND FLORET RACHILLA SEGMENT: 1 = HAIRLESS 2 = HAIRY

[1.6] (1.55 mm) MM. SECOND FLORET RACHILLA SEGMENT LENGTH

[ ] RACHILLA HAIRS: 1 = SHORT 2 = LONG

9. SPIKELET:

[3] SPIKELET SEPARATION BY: 1 = ABSCISSION 2 = SEMIABSCISSION 3 = FRACTURE

[1] FLORET SEPARATION BY: 1 = DISARTICULATION 2 = HETEROFRACTURE 3 = BASIFRACTURE

[2.1] FLORETS PER SPIKELET (mean no.)

10. GLUMES: (Glume Color: The Royal Horticultural Society's or any recognized color chart should be used to determine the color of the described variety.)

[08] (7.7) MM. WIDTH [21] (20.9) MM. LENGTH [09] (9.2) NO. OF VEINS ON GLUMES [2] COLOR: 1 = WHITE 2 = YELLOW 3 = RED 4 = STRIPED

11. LEMMA: (Lemma Color: The Royal Horticultural Society's or any recognized color chart should be used to determine the color of the described variety.)

[13] MM. LENGTH

[1] HAIRINESS OF DORSAL SURFACE: 1 = HAIRLESS 2 = HAIRY

[3] light tan COLOR: 1 = WHITE 2 = YELLOW 3 = RED 4 = GRAY 5 = BLACK

12. AWN (First floret):

[1] OCCURENCE: 1 = ABSENT (Walken) 2 = INFREQUENT (Yancey) 3 = COMMON (Chilocco) 4 = FREQUENT (Random)

[ ] TYPE: 1 = NON-TWISTED 2 = TWISTED 3 = TWISTED GENICULATE

[ ] MM. AWN LENGTH

13. SEED:

[2] FLORESCENCE UNDER ULTRAVIOLET LIGHT: 1 = FLORESCENT 2 = NON-FLORESCENT

[1] BASAL HAIR: 1 = ABSENT (Florida 501) 2 = ABSENT TO FEW (Yancey) 3 = FEW TO SEVERAL (Lee) 4 = SEVERAL TO NUMEROUS (Florileo) 5 = NUMEROUS (Red Rustproof)

[ ] MM. BASAL HAIR LENGTH

[261] GMS. PER 1,000 SEEDS

[189] % GROAT PROTEIN

[18] MG. GROAT WEIGHT (each)

[86] % GROAT OIL

14. INSECTS: (0 = NOT TESTED, 1 = SUSCEPTIBLE, 2 = RESISTANT)

[1] CEREAL LEAF BEETLE [0] BLUEGRASS BILLBUG [0] GRAIN BUG (C. Sayi) [0] NEMATODE (Type)_____

[0] GREEN BUG (Biotype)_____ OTHER *(Specify)*_____

15. DISEASE: (0 = NOT TESTED, 1 = SUSCEPTIBLE, 2 = RESISTANT)

[1] HALO BLIGHT [0] POWDERY MILDEW [0] SEPTORIA LEAF BLOTCH [0] SOIL-BORNE MOSIAC

[0] HELMINTHOSPORIUM LEAF BLOTCH [2] YELLOW DWARF VIRUS [2] VICTORIA BLIGHT [ ] OTHER *(Specify)*

SPECIFY RACES TESTED:

	RACES SUSCEPTIBLE	RACES RESISTANT
[ ] CROWN RUST seedling tests	264A, 264B, 305	202, 216, 239, 263, 290, 326
[ ] STEM RUST seedling test	US87=C9	7, 7A, (US19=2AH=C24)
[ ] COVERED SMUT		
[ ] LOOSE SMUT	New race in WI, which attacks Lodi	Older prevalent field races

16. INDICATE VARIETY YOU BELIEVE MOST CLOSELY TO RESEMBLE THAT SUBMITTED:

CHARACTER	VARIETY	CHARACTER	VARIETY
PLANT TILLERING	Beedee	LEAF COLOR	Beedee
LEAF SIZE	Beedee	LEAF CARRIAGE	Beedee
SEED COLOR	Beedee	SEED SHAPE	Beedee

COMMENTS:

FORM GR-470
(12-15-72)

UNITED STATES DEPARTMENT OF AGRICULTURE
AGRICULTURAL MARKETING SERVICE
GRAIN DIVISION
HYATTSVILLE, MARYLAND 20782

FORM APPROVED
OMB NO. 40-R3712

APPLICATION FOR PLANT VARIETY PROTECTION CERTIFICATE

INSTRUCTIONS: *See Reverse.*

1. VARIETY NAME OR TEMPORARY DESIGNATION	2. KIND NAME	FOR OFFICIAL USE ONLY
WRIGHT	Oats	PV NUMBER 7600036
3. GENUS AND SPECIES NAME: Avena sativa L.	4. FAMILY NAME (*Botanical*): Gramineae	FILING DATE 2·3·76 / TIME 10:30 A.M.
	5. DATE OF DETERMINATION: December 16, 1974	FEE RECEIVED $ 250.00 / BALANCE DUE $ —
		$ 250.00 / $ —
		$ 250.00 / $ —

6. NAME OF APPLICANT(S)	7. ADDRESS (*Street and No. or R.F.D. No., City, State, and ZIP Code*)	8. TELEPHONE AREA CODE AND NUMBER
Wisconsin Agricultural Experiment Station. R. A. Forsberg, authorized.	Agricultural Hall University of Wisconsin Madison, WI 53706	608 - 262-3994 262-6527 262-1390

9. IF THE NAMED APPLICANT IS NOT A PERSON, FORM OF ORGANIZATION: (*Corporation, partnership, association, etc.*)	10. STATE OF INCORPORATION	11. DATE OF INCORPORATION
Wis. Agr. Exp. Sta.		

12. Name and mailing address of applicant representative(s), if any, to serve in this application and receive all papers:

R. A. Forsberg, Department of Agronomy, University of Wisconsin, Madison, WI 53706

13. CHECK BOX BELOW FOR EACH ATTACHMENT SUBMITTED:

[X] 13A. Exhibit A, Origin and Breeding History of the Variety (*See Section 52 of the Plant Variety Protection Act.*)

[X] 13B. Exhibit B, Botanical Description of the Variety

[X] 13C. Exhibit C, Objective Description of the Variety

[X] 13D. Exhibit D, Data Indicative of Novelty

[X] 13E. Exhibit E, Statement of the Basis of Applicant's Ownership

14A. Does the applicant(s) specify that seed of this variety be sold by variety name only as a class of certified seed? (*See Section 83(a). (If "Yes," answer 14B and 14C below.)* [X] YES [ ] NO

14B. Does the applicant(s) specify that this variety be limited as to number of generations? [X] YES [ ] NO

14C. If "Yes," to 14B, how many generations of production beyond breeder seed? [X] FOUNDATION [X] REGISTERED [X] CERTIFIED

The applicant declares that a viable sample of basic seed of this variety will be deposited upon request before issuance of a certificate and will be replenished periodically in accordance with such regulations as may be applicable.

The undersigned applicant(s) of this sexually-reproduced novel plant variety believes that the variety is distinct, uniform, and stable as required in Section 41 and is entitled to protection under the provisions of Section 42 of the Plant Variety Protection Act.

Applicant is informed that false representation herein can jeopardize protection and result in penalties.

January 23, 1976
(DATE)

Robert A. Forsberg
(SIGNATURE OF APPLICANT)

(DATE)

(SIGNATURE OF APPLICANT)

Exhibit A, Origin and Breeding History of the Variety

Wright Oats (Wisconsin selection X1641-2, C.I. 9218)

Wright was developed primarily by workers at the Wisconsin Agricultural Experiment Station. The pedigree of Wright is:

Trispernia x Belar 2x Beedee 3x Beedee 4x Beedee.

Chronology of Crosses:

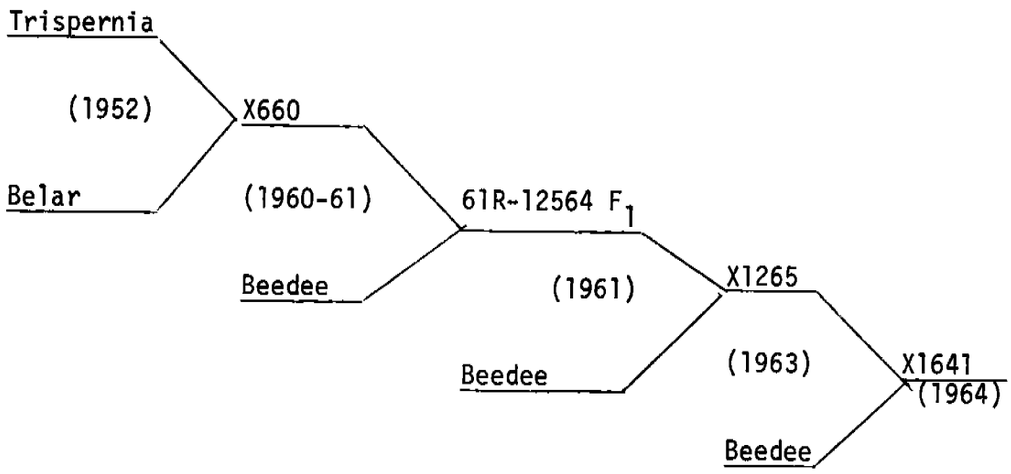

The final cross was made in the 1963 field nursery and F_1 plants were grown in the 1964 field nursery. The final panicle selection was from an F_4 line in 1967, leading to a 1968 F_5 line (X1641-2) which was harvested in bulk and which became Wright. The primary selection criteria in the F_2 population and among F_3, F_4, and F_5 lines were productive agronomic appearance, resistance to leaf and stem rust, stiff straw, and good grain quality -- especially lower hull percentage and acceptable groat-protein concentration.

The initial yield test of Wright followed, in the preliminary three-replicate series at Madison in 1969. It was then entered in the main Madison nursery trial in 1970, in nursery trials at five University Experimental Farms in 1971, and in the large drill-plot series (Arlington) in 1971. Wright was evaluated in the Cooperative Uniform Midseason Oat Performance Nursery in 1972, 1973, and 1974. Monitored closely in these tests were the grain

yield, test weight, protein concentration, straw strength, and response to diseases of Wright.

Foundation seed was produced in 1974 and was released to growers of certified seed in Wisconsin in the spring of 1975. Certified seed is available for farm production in 1976.

Wright has demonstrated uniformity and stability throughout the testing period for agronomic and kernel characteristics and for response to diseases.

Exhibit B, Botanical Description of the Variety.

Wright is classified as Avena sativa L. Plants are tall with intermediate to long leaves consisting of blade, ligule, and sheath. The panicle is open and equilateral, with branches that droop slightly at maturity. The rachis is straight. Spikelets separate from their pedicels by fracture, and florets separate by disarticulation of their rachilla segments. Lemmas are glabrous, and awns are absent. The caryopsis is retained in the lemma and palea (hulled), and grain color (lemma and palea) is light tan. The groat crease is very tight, resulting in very high test weight. Groat color is a light pinkish-tan.

Wright has several traits in common with Beedee, a recurring parent in its pedigree: kernels are tan and plump; it is midseason in maturity; it is broadly adapted; and it is tolerant to the red leaf virus. Compared to Beedee, Wright is about 6 cm taller, has higher grain yield and test weight averages, has stiffer straw and lodges less, is considerably more resistant to prevalent races of leaf (crown) rust, is more resistant to the new "Lodi" race of loose smut, has a higher groat percent (lower hull percent), averages about 1% lower groat protein, but produces more pounds of protein per acre.

13D. Exhibit D, Data Indicative of Novelty

1. Wright has the highest test weight (pounds/bushel) of any cultivar grown in the northcentral U.S. It ranked first in Wisconsin tests for two consecutive three-year periods, 1972-1973-1974 and 1973-1974-1975. Wright also ranked first for test weight each of the three years it was entered in the Cooperative Uniform Mid-season Oat Performance Nursery. Comparative data from these tests are tabulated below. All other named cultivars are listed alphabetically, with their averages and ranks.

A. Wisconsin Tests

	20 tests 1972-1973-1974		21 tests 1973-1974-1975	
Cultivar		Rank		Rank
Wright	37.7 Lbs./Bu.	1	38.3 Lbs./Bu.	1
Dal	36.4 "	2	37.1 "	2
Froker	35.8 "	3	36.0 "	3
Goodland	35.8 "	4	36.0 "	4
Holden	34.3 "	6	34.8 "	6
Lodi	33.6 "	7	33.8 "	7
Stout	--		35.0 "	5

7600036

B. Uniform Nursery Tests

1972
15 Locations

(27 entries)

Cultivar	Lbs/B	Rank
Wright	36.1	1
Astro	33.2	21
Chief	34.7	7
Clintland 64	34.5	13
Dal	34.6	10
Goodland	34.7	7
Gopher	32.8	23
Jaycee	35.6	2
Korwood	34.0	16
Lodi	32.9	22
Mackinaw	35.1	6
Mariner	35.2	5
Multiline M73	34.6	10
Noble	35.3	4
Orbit	32.7	24
Otee	34.7	7
Stout	33.9	17

1973
16 Locations

(28 entries)

Cultivar	Lbs/B	Rank
Wright	37.7	1
Clintland 64	35.4	10
Dal	35.7	5
Gemini	33.6	22
Goodland	35.3	11
Gopher	33.6	23
Hudson	30.1	28
Jaycee	35.5	6
Lodi	33.3	24
Multiline M73	35.1	13
Noble	35.5	8
Orbit	32.6	27
Scott	32.9	25
Spear	35.0	25
Stout	34.5	16

1974
18 Locations

(27 entries)

Cultivar	Lbs/B	Rank
Wright	36.4	1
Clintland 64	34.1	11
Dal	34.3	9
Gopher	32.1	21
Hudson	29.6	27
Jaycee	34.6	6
Lodi	32.1	22
Noble	34.4	7
Orbit	31.2	26
Scott	31.7	25
Stout	33.9	13

7600036

2. Parentage different from other oat cultivars:

   Pedigree = Trispernia x Belar 2x Beedee 3x Beedee 4x Beedee

3. Differs from Beedee for the following traits:

   a) about 6 cm taller,

   b) higher grain yield,

   c) higher test weight,

   d) stiffer straw,

   e) lodges less,

   f) more resistant to leaf (crown) rust,

   g) more resistant to the new "Lodi" race of loose smut,

   h) higher groat percent (lower hull percent),

   i) about 1% lower in groat protein, but

   j) produces more pounds of protein per acre.

7600036

UNIVERSITY OF WISCONSIN—MADISON

DEPARTMENT OF AGRONOMY 1575 Linden Drive
Madison, Wisconsin 53706
608-262-1390

July 30, 1976

Mr. Larry W. Dosier, Examiner
Plant Variety Protection Office
Grain Division
6525 Belcrest Road
Hyattsville, MD 20782

Dear Mr. Dosier:

Re: Oat application no. 7600036, "Wright"

I am enclosing new and revised information pertinent to our application for plant variety protection for Wright oats.

Exhibit A has been modified by inserting early generation and late generation selection criteria.

Exhibit B was not changed, but was retyped as a separate document.

Exhibit C has been revised by submitting new form GR47035(1-76), Objective Description of Variety.

(a) Of the six standard varieties, only Jaycee and Clintland 64 have ever been grown commercially in the northcentral oat region. Since Wright is taller than both Jaycee and Clintland 64, Wright is described as being 5 cm shorter than Lodi.

(b) The "red" oat color is a tan color associated with Avena byzantina or southern (U.S.) oats. It is a tan color, not red in the conventional sense.

Exhibit D. In the original application dated January 23, 1976, data were provided which indicated that Wright differed from all other named varieties (in common tests) by having the highest test weight. However, only test weight means were provided. Please inform me if mean differences, and standard errors of the mean differences, are essential to the claim of novelty.

Wright is a Beedee backcross, i.e., Beedee was the recurrent parent in the last three crosses in Wright's pedigree. Consequently Wright resembles Beedee more closely phenotypically than it (Wright) resembles any other variety. However, Wright differs very clearly from Beedee in several attributes (see item #3 of the original Exhibit D), especially in plant height (Wright is 6 cm taller), higher test weight, and stiffer straw.

In summary, we are prepared to claim novelty either through a comparison to Beedee (which may require additional detailed documentation) or based on an unmatched or unequalled performance trait -- test weight. Please inform me if you prefer one basis over the other, and whether or not additional data are required.

Exhibit E has been revised to indicate that the Wisconsin Agricultural Experiment Station is the sole owner of Wright oats.

I will look forward to your evaluation of this information and will gladly provide additional data if necessary.

Sincerely yours,

R. A. Forsberg

R. A. Forsberg
Professor of Agronomy

RAF/ml

Enclosures

7600036

Exhibit E

Basis of Applicant's Ownership

"This is to certify that I have been duly appointed as agent of the applicant. The applicant, the Wisconsin Agricultural Experiment Station, is the sole owner of Wright oats."

Robert A. Forsberg

Robert A. Forsberg
Professor of Agronomy
Agronomy Department
University of Wisconsin-Madison
Madison, WI 53706

FORM GR-470 (REVERSE)

U.S. DEPARTMENT OF AGRICULTURE
RECEIVED
PVPO

INSTRUCTIONS

GENERAL: Send an original copy of the application, exhibits and $250.00 fee to U.S. Dept. of Agriculture, Agricultural Marketing Service, Grain Division, 6525 Belcrest Road, Hyattsville, Maryland 20782. (See Section 180.175 of the regulations and rules of practice.) Retain one copy for your files. All items on the face of the form are self-explanatory unless noted below.

ITEM

5 Insert the date the applicant determined that he had a new variety based on the definition in Section 41 (a) of the Act and decision is made to increase the seed.

13a First, give the genealogy, including public and commercial varieties, lines, or clones used, and the breeding method. Second, give the details of subsequent stages of selection and multiplication. Third, indicate the type and frequency of variants during reproduction and multiplication and state how these variants may be identified. Fourth, provide evidence on stability.

13b First, give any special characteristics of the seed and of the plant as it passes through the seedling stage, flowering stage and the fruiting stage. Second, describe the mature plant and compare it with a similar commercial variety grown under the same conditions, and indicate the differences.

13c A supplemental form will be furnished by the PVPO to describe in detail a variety for each kind of seed.

13d Provide complete data indicative of novelty. Seed and plant specimens or photographs of seed and plant comparisons clearly indicating novelty may be submitted. Seeds submitted may be sterile.

13e Indicate whether applicant is the actual breeder, the employer of the breeder, the owner through purchase or inheritance, etc.

FORM GR-470-35
(1-76)

FORM APPROVED: OMB NO. 40-R3712

U.S. DEPARTMENT OF AGRICULTURE
AGRICULTURAL MARKETING SERVICE
GRAIN DIVISION
HYATTSVILLE, MARYLAND 20782

OBJECTIVE DESCRIPTION OF VARIETY
OAT
(Avena spp.)

NAME OF APPLICANT(S)
Wisconsin Agricultural Experiment Station
(R. A. Forsberg, Agent)

VARIETY NAME OR TEMPORARY DESIGNATION
Wright

ADDRESS (Street and No., or R.F.D. No., City, State, and ZIP Code)
Agricultural Hall, University of Wisconsin
Madison, WI 53706

FOR OFFICIAL USE ONLY
PVPO NUMBER
7600036

Place the appropriate number that describes the varietal character of this variety in the boxes below.
Place a zero in first box (e.g. [0][8][9] or [0][9]) when number is either 99 or less.

1. SPECIES:

[1] 1 = SATIVA 2 = BYZANTINA 3 = OTHER (Specify) _____

2. GROWTH HABIT:

[3] 1 = WINTER 2 = SEMIWINTER 3 = SPRING

[3] JUVENILE GROWTH: 1 = PROSTRATE 2 = SEMIPROSTRATE 3 = ERECT

STANDARD VARIETIES

1 = JAYCEE 2 = CLINTLAND 64 3 = CAYUSE 4 = NORLINE 5 = YANCEY 6 = FLORIDA 501

3. MATURITY (50% flowering):

[0][3] DAYS EARLIER THAN..... Dal ~~STANDARD VARIETY~~ [0][2] DAYS LATER THAN..... [2] STANDARD VARIETY

[3] Season: 1 = VERY EARLY (Jaycee) 2 = EARLY (Nodaway 70) 3 = MIDSEASON (Clintford)
4 = LATE (Lodi) 5 = VERY LATE (Garry) 6 = EXTREMELY LATE (Mackinaw)

4. PLANT HEIGHT (From soil level to top of head):

[0][9][9] CM. TALL

[0][5] CM. SHORTER THAN.... Lodi ~~STANDARD VARIETY~~
[0][8] CM. TALLER THAN..... [2] STANDARD VARIETY

5. STEM:

[2] DIAMETER: 1 = FINE (Kherson) 2 = MEDIUM (Clintford) 3 = COARSE (Nodaway 70)

[1] HAIRINESS AT UPPER CULM NODES: 1 = HAIRLESS 2 = HAIRY

[1] MATURE STEM COLOR: 1 = YELLOW 2 = REDDISH

6. LEAF: (Leaf Color: The Royal Horticultural Society's or any recognized color chart should be used to determine the leaf color of the described variety.)

[2] CARRIAGE: 1 = DROOPING (Random) 2 = ERECT (Walken)

[4] COLOR: 1 = YELLOW GREEN 2 = LT. GREEN 3 = DK. GREEN 4 = BLUE GREEN

[1][5] MM. WIDTH (First leaf below flag leaf)

[2] LIGULE: 1 = ABSENT 2 = PRESENT

[1] LEAF MARGIN: 1 = GLABROUS 2 = CILIATE

[1] LEAF SHEATH: 1 = HAIRLESS 2 = HAIRY

7. HEAD:

[1] PANICLE SHAPE: 1 = EQUILATERAL 2 = INTERMEDIATE 3 = SIDE PANICLE (Unilateral)

[1] ATTACHMENT OF LOWER WHORL OF BRANCHES: 1 = FIRST NODE 2 = SECOND NODE (False node)

[3] PANICLE SIZE: 1 = SMALL (Yancey) 2 = MEDIUM (Walken) 3 = LARGE (Markton)

[3] PANICLE WIDTH: 1 = NARROW (Gopher) 2 = MIDBROAD (Yancey) 3 = BROAD (Nodaway 70)

[2][2] CM. PANICLE LENGTH [2][3] NUMBER OF BRANCHES [0][6] NUMBER OF WHORLS OF BRANCHES (5.7)

[~~2~~ 3] POSITION OF BRANCHES: 1 = ASCENDING (Yancey) 2 = SPREADING (Cayuse) 3 = DROOPING (Markton)
4 = PECTINATE (White Tartar) 5 = CONFUSED (Storm King)

As per telephone conversation of 8/25/76